4 STANCE PIT LATRINE

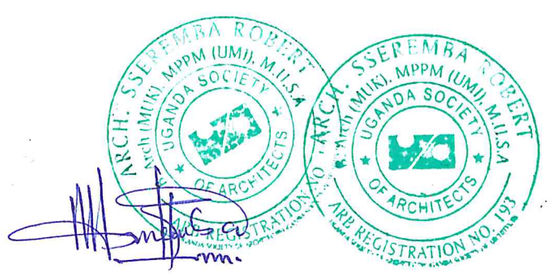

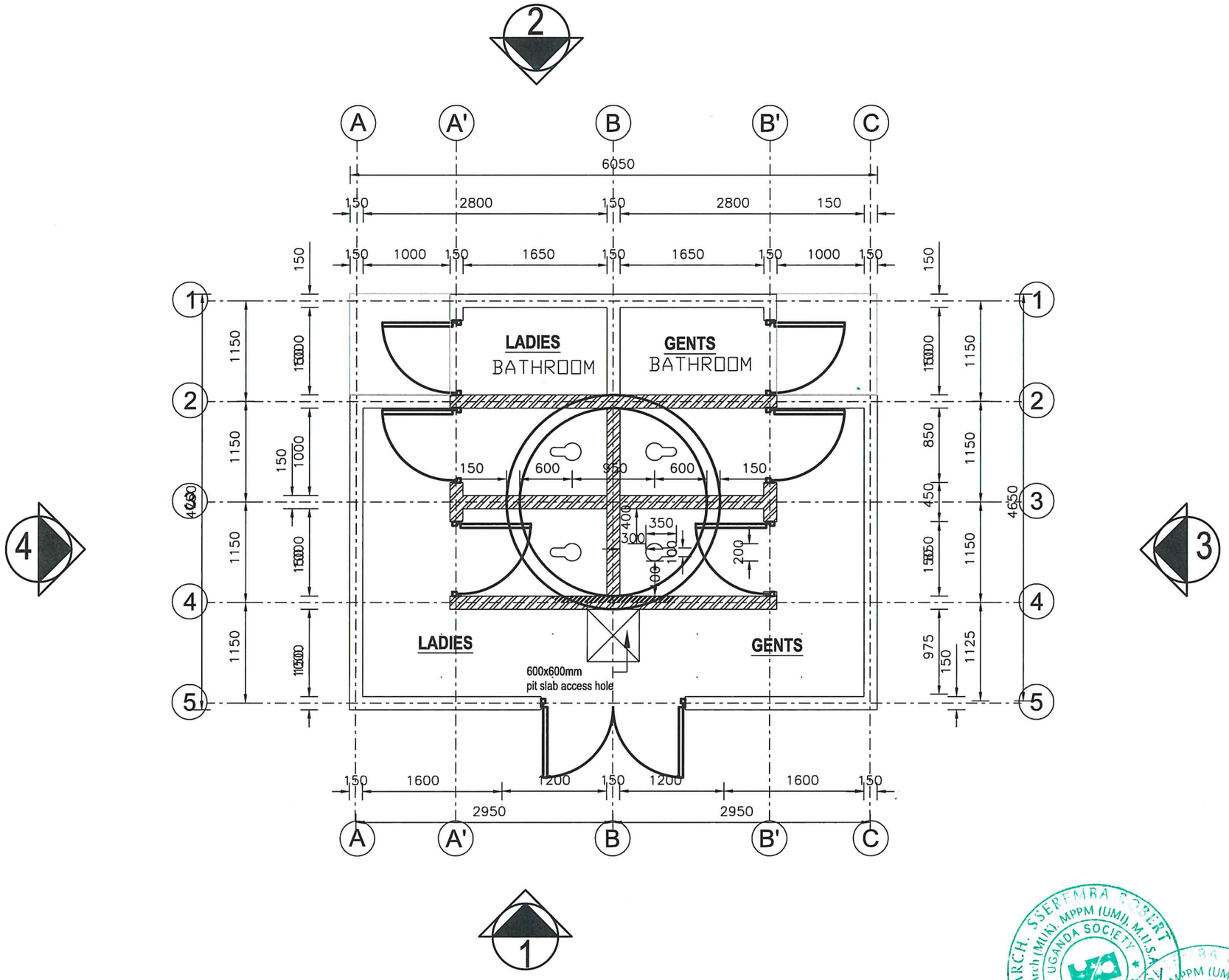

FLOOR LAYOUT
SCALE 1:50

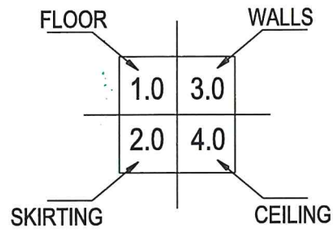

FINISHES SCHEDULE

1.0 FLOOR:
1.1 Polished Terrazzo finish
1.2 Insitu concrete troweled smooth with cement.
1.3 Cement and sand screed troweled smooth with __pigment and hardener

2.0 SKIRTING:
2.1 100mm high Terrazzo skirting
2.2 100mm high Cement-sand skirting
2.3 100mm high hardwood timber skirting

3.0 WALL FINISH:
3.1 25 mm thick Smooth Plaster finished with one coat Plaster Primer and 3 coats Silk Vinyl approved Paint
3.2 Ceramic wall tiles up to 2100mm height on approved waterproof grout

4.0 CEILING:
4.1 Gypsum plaster board ceiling with vinyl finish
4.2 Sadomatt ceiling paint on 12mm thick plastered metal lathe ceiling

CONSULTANT:	FUNDER:	CLIENT:	PROJECT NAME:					ENGINEER'S SEAL	
MBW CONSULTING Plot 107 Kira Road, Kamwokya, P.O.Box 6493, Kampala-Uganda Tel: +256 (0)393 740600 / 0)701 740600 Email: mbw@mbw.co.ug	USAID FROM THE AMERICAN PEOPLE	UWA Conserving for Generations Uganda Wildlife Authority @ugandawildlifeautority PO Box 3530, Kampala, Uganda Tel +256-41-355114, 355111, 355118	USAID / Uganda Architect & Engineering Design and Construction Management Services ACTIVITY NAME: Infrastructure for Biodiversity Conservation in Kidepo Valley NP DRAWING DESCRIPTION: Ranger Posts _4 Stance Pit Latrine FLOOR LAYOUT	DESIGNED BY: BB DRAWN BY: BK CHECKED BY: BB APPROVED BY: WF	REV_1 REV. No.	SEP 2022 DATE	DESCP_REVISED THE LAYOUT DESCRIPTION OF REVISION	BY	SCALE: AS NOTED REF FILE: – STATUS: Construction DATE: 2022.09.23 PAPER: A3 DRAWING NUMBER: 906-01-DWG-A501 COPYRIGHT RESERVED	

Ranger Posts

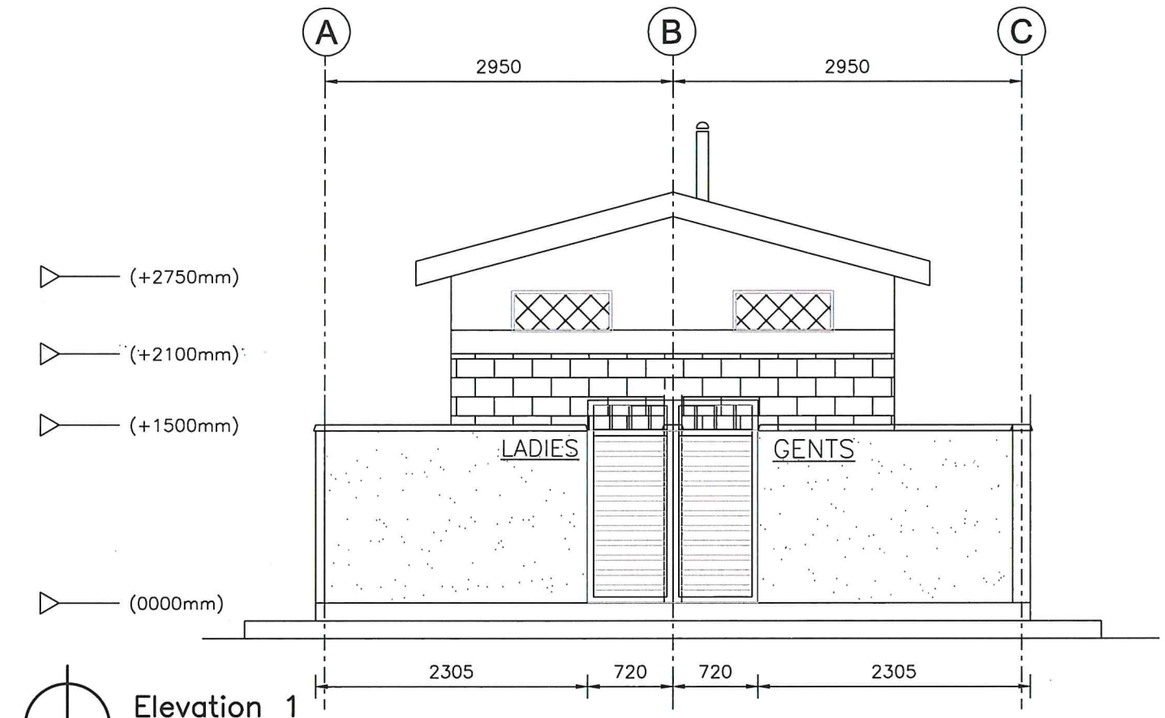

Elevation 1

SCALE 1:50

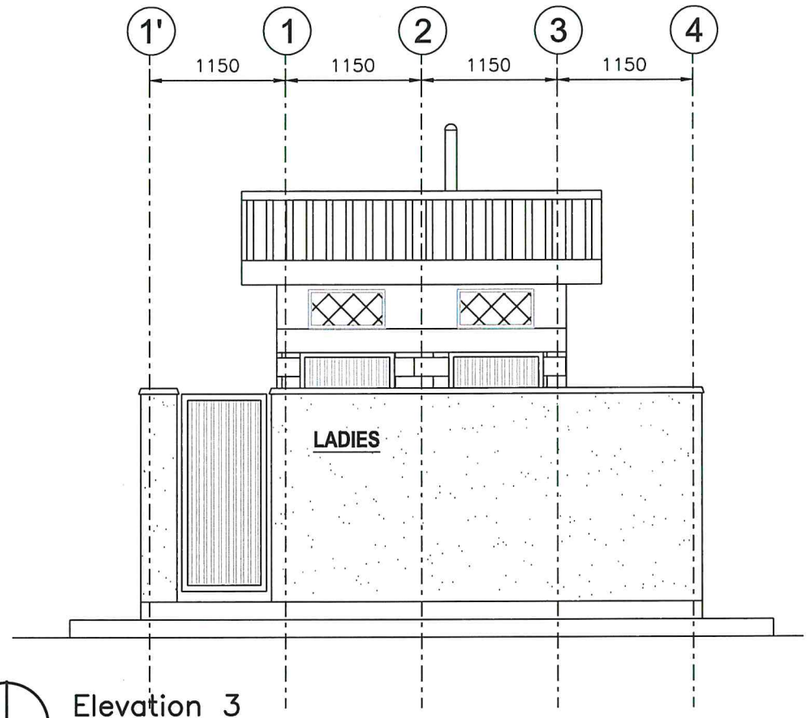

Elevation 3

SCALE 1:50

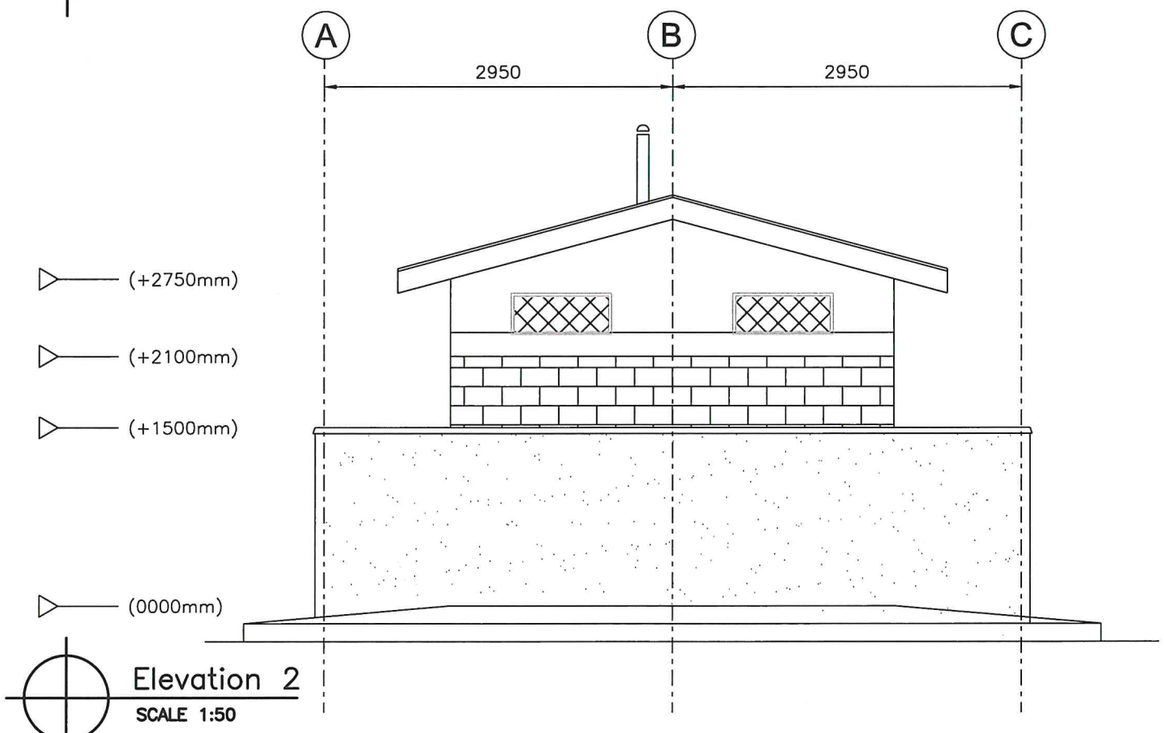

Elevation 2

SCALE 1:50

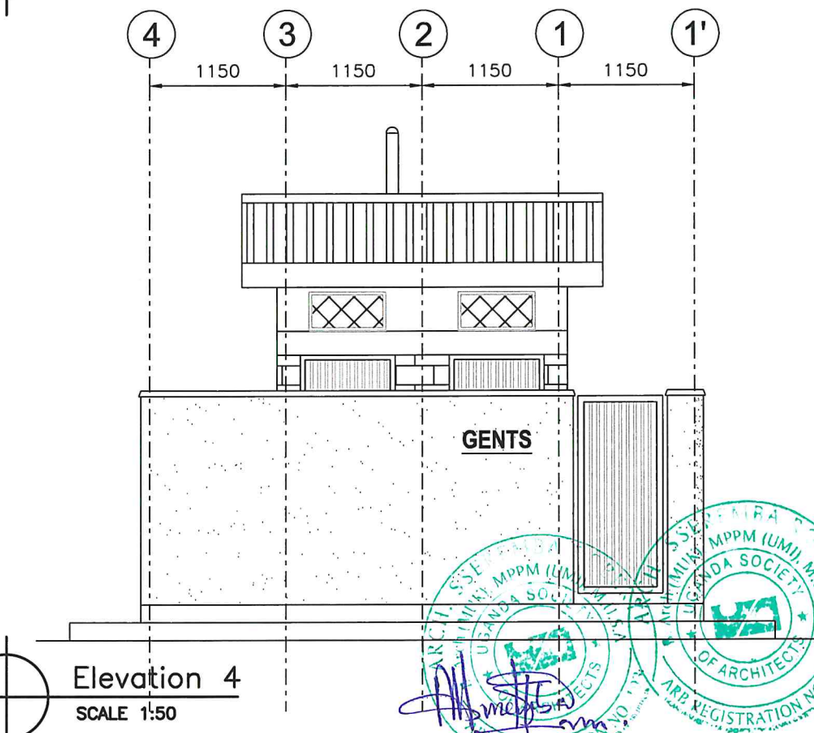

Elevation 4

SCALE 1:50

CONSULTANT:

MBW CONSULTING

Plot 107 Kira Road, Kamwokya,
P.O.Box 8493, Kampala-Uganda
Tel: +256 (0)393 740800 /
0)701 740800
Email: mbw@mbw.co.ug

FUNDER:

USAID FROM THE AMERICAN PEOPLE

CLIENT:

Uganda Wildlife Authority
@ugandawildlifeautority
PO Box 3530, Kampala,
Uganda
Tel +256-41-355114, 355111,
355118

PROJECT NAME:
USAID / Uganda Architect & Engineering Design and Construction Management Services

ACTIVITY NAME:
Infrastructure for Biodiversity Conservation in Kidepo Valley NP

DRAWING DESCRIPTION:
Ranger Posts _4 Stance Pit Latrine
ELEVATIONS

DESIGNED BY: BB					
DRAWN BY: BK					
CHECKED BY: BB					
APPROVED BY: WF	REV._1	SEP 2022	DESCP_REVISED THE LAYOUT		
	REV. No.	DATE	DESCRIPTION OF REVISION	BY	

ENGINEER'S SEAL

SCALE: AS NOTED	REF FILE: –	
STATUS: Construction	DATE: 2022.09.23	PAPER: A3
DRAWING NUMBER: 906-01-DWG-A502		

COPYRIGHT RESERVED

Ranger Posts

ROOF NOTES:
- 22.5 Roof Pitch of
- 26 gauge IT4 Roofing Sheets, on
- 75x50mm timber purlins on
- 100x50mm timber rafters on
- 100x75mm timber wall plate

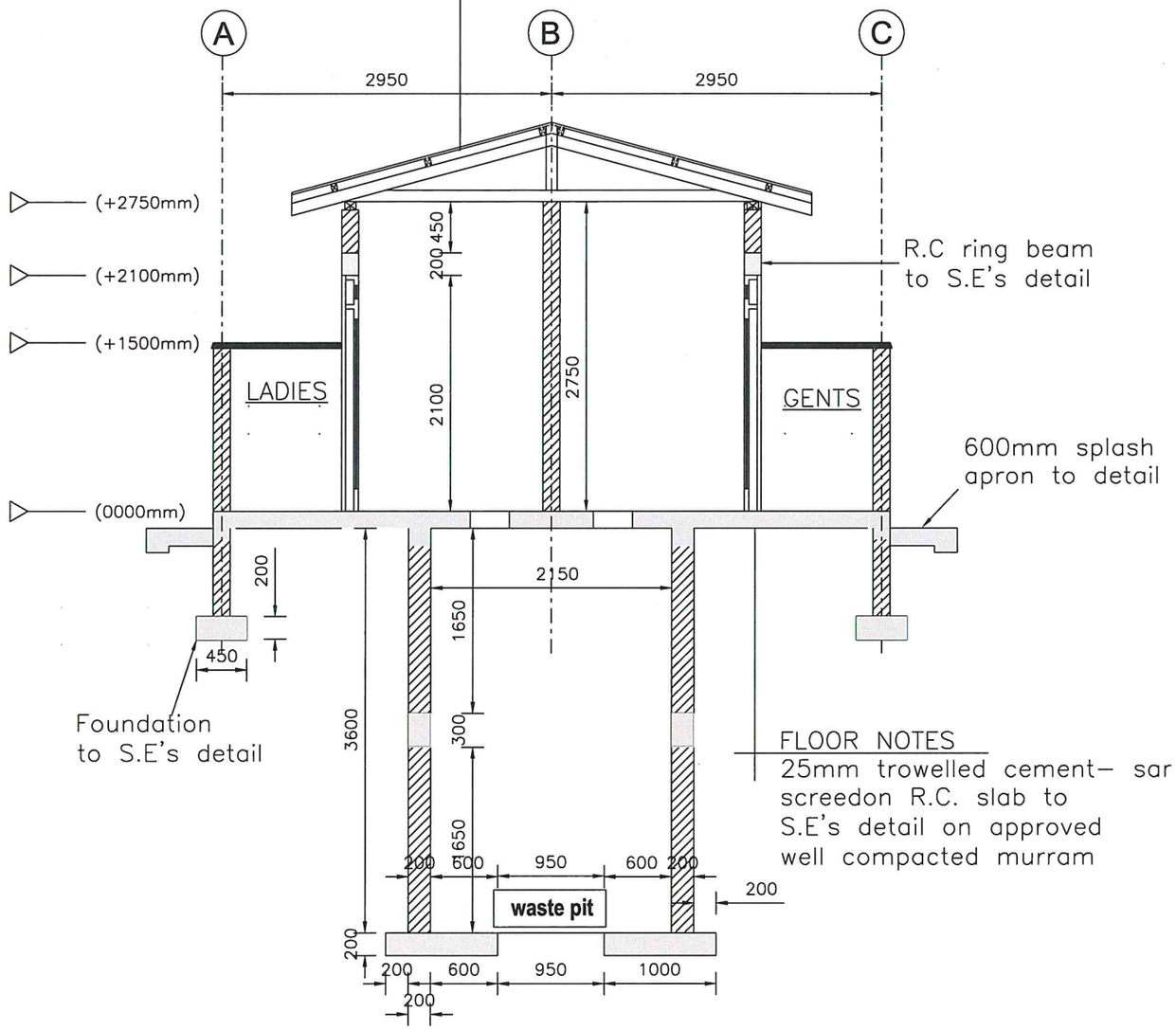

FLOOR NOTES
25mm trowelled cement– sar screedon R.C. slab to S.E's detail on approved well compacted murram

SECTION A–A
SCALE 1:50

DOOR SCHEDULE			
Mark	D1	D2	D3
Elevation	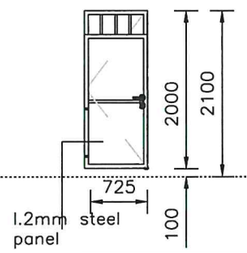	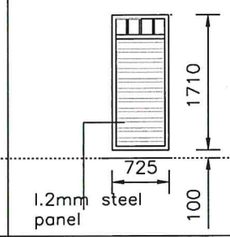	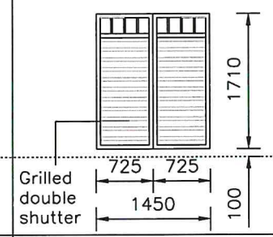
Plan	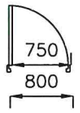	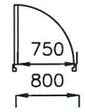	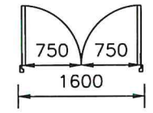
Remarks	Steel door on purpose made metallic door frames	Steel door on purpose made metallic door frames	Steel door on purpose made metallic door frames
Quantity	04	02	01
Location			

OPENING SCHEDULE
SCALE 1:75

ARCH. SSEREMBA ROBERT
B. Arch (MUK), MPPM (UMI), M.U.S.A
UGANDA SOCIETY OF ARCHITECTS
REGISTRATION NO. 193

CONSULTANT:	FUNDER:	CLIENT:	PROJECT NAME:	DESIGNED BY:					ENGINEER'S SEAL	SCALE:	REF FILE:
MBW CONSULTING Plot 107 Kira Road, Kamwokya, P.O.Box 8493, Kampala-Uganda Tel: +256 (0)393 740800 / 0)701 740800 Email: mbw@mbw.co.ug	USAID FROM THE AMERICAN PEOPLE	UWA Conserving for Generations Uganda Wildlife Authority @ugandawildlifeautority PO Box 3530, Kampala, Uganda Tel +256-41-355114, 355111, 355118	USAID / Uganda Architect & Engineering Design and Construction Management Services ACTIVITY NAME: Infrastructure for Biodiversity Conservation in Kidepo Valley NP DRAWING DESCRIPTION: Ranger Posts _4 Stance Pit Latrine SECTION A-A & OPENING SCHEDULE	BB DRAWN BY: BK CHECKED BY: BB APPROVED BY: WF	REV_1 REV. No.	SEP 2022 DATE	DESCP_REVISED THE LAYOUT DESCRIPTION OF REVISION	BY		AS NOTED	–
										STATUS: Construction	DATE: 2022.09.23 / PAPER: A3
										DRAWING NUMBER: 906–01–DWG–A503	
										COPYRIGHT RESERVED	

Ranger Posts

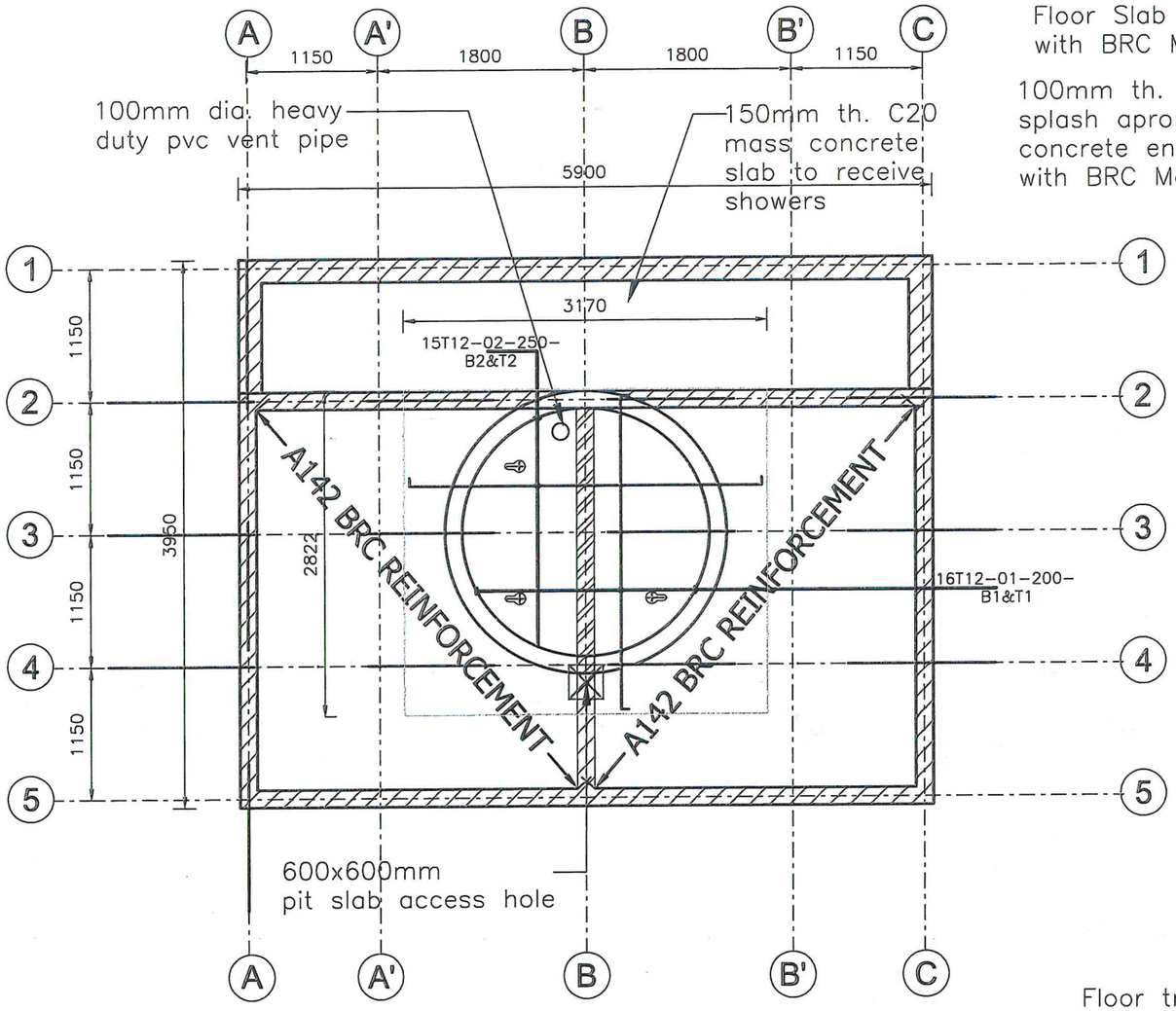

GROUND FLOOR SLAB
SCALE 1:50

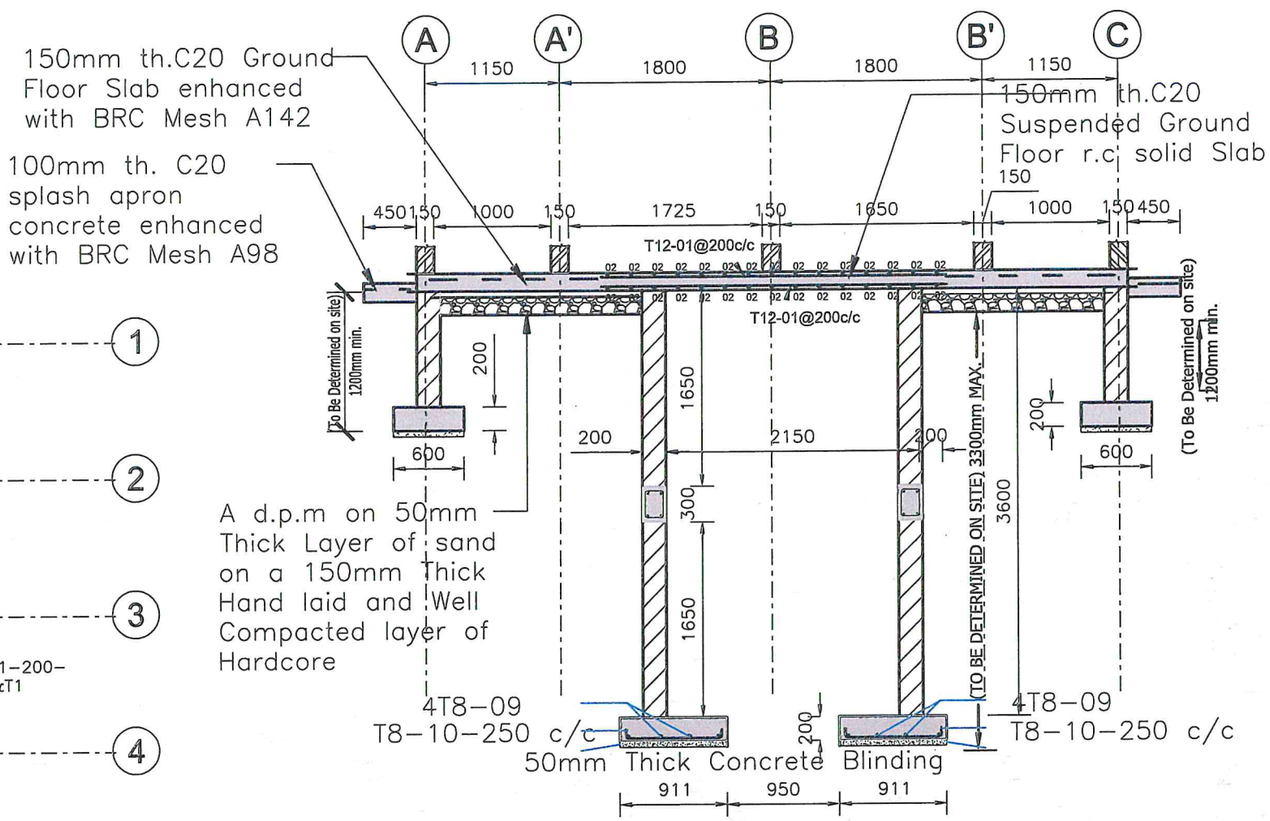

SECTION Thru Pit
SCALE 1:50

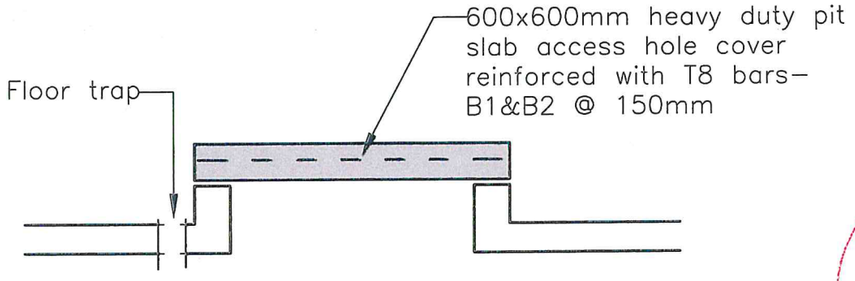

DETAIL AT ACCESS HOLE
SCALE:NTS

BUNNETT BAGOMPEKA
UGANDA ENGINEERS REGISTRATION BOARD
ERB REGISTRATION
9/12/2022

CONSULTANT:
MBW CONSULTING
Plot 107 Kira Road, Kamwokya, P.O.Box 8493, Kampala-Uganda
Tel: +256 (0)393 740200 / 0)701 740300
Email: mbw@mbw.co.ug

FUNDER:
USAID FROM THE AMERICAN PEOPLE

CLIENT:
Uganda Wildlife Authority
@ugandawildlifeauthority
PO Box 3530, Kampala, Uganda
Tel +256-41-355114, 355111, 355110

PROJECT NAME:
USAID / Uganda Architect & Engineering Design and Construction Management Services

ACTIVITY NAME:
Infrastructure for Biodiversity Conservation in Kidepo Valley NP

DRAWING DESCRIPTION:
Ranger Posts _4 Stance Pit Latrine
RC SLAB LAYOUT AND DETAILS

DESIGNED BY: BB				
DRAWN BY: BK				
CHECKED BY: BB				
APPROVED BY: WF	REV_1	SEP 2022	DESCP_REVISED THE LAYOUT	
	REV. No.	DATE	DESCRIPTION OF REVISION	BY

ENGINEER'S SEAL

SCALE: AS NOTED | REF FILE: -
STATUS: Construction | DATE: 2022.09.23 | PAPER: A3
DRAWING NUMBER: 908-01-DWG-3501

COPYRIGHT RESERVED

Ranger Posts

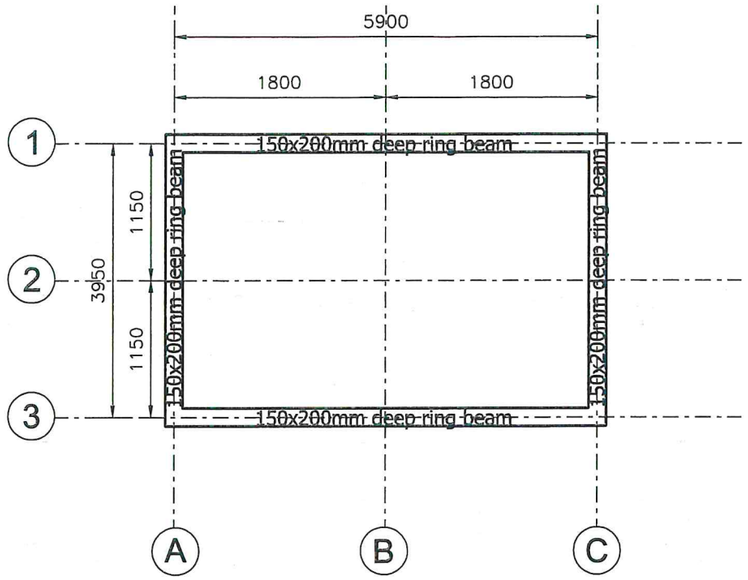

RING BEAM LAYOUT
SCALE 1:50

ROOF NOTES:
- 22.5 Roof Pitch of
- 26 gauge IT4 Roofing Sheets, on
- 75x50mm timber purlins on
- 100x50mm timber rafters on
- 100x75mm timber wall plate

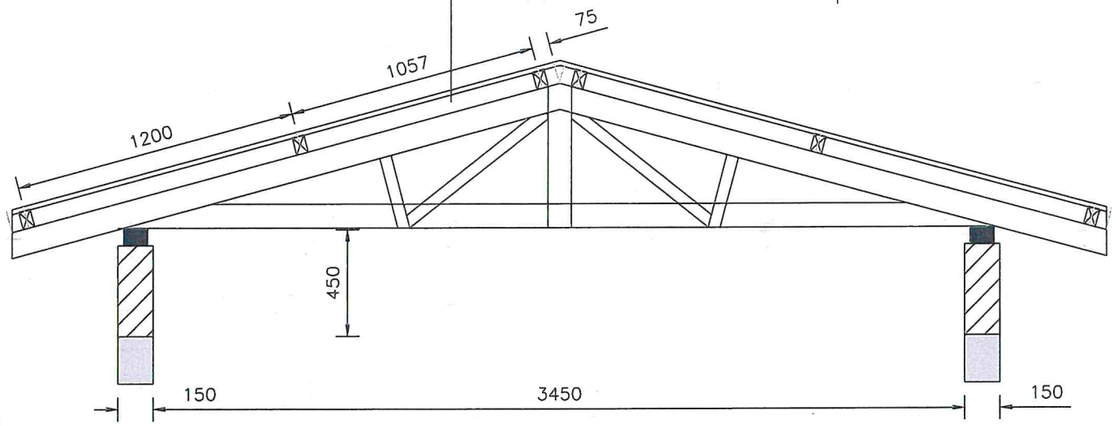

SECTION Y–Y
SCALE 1:25

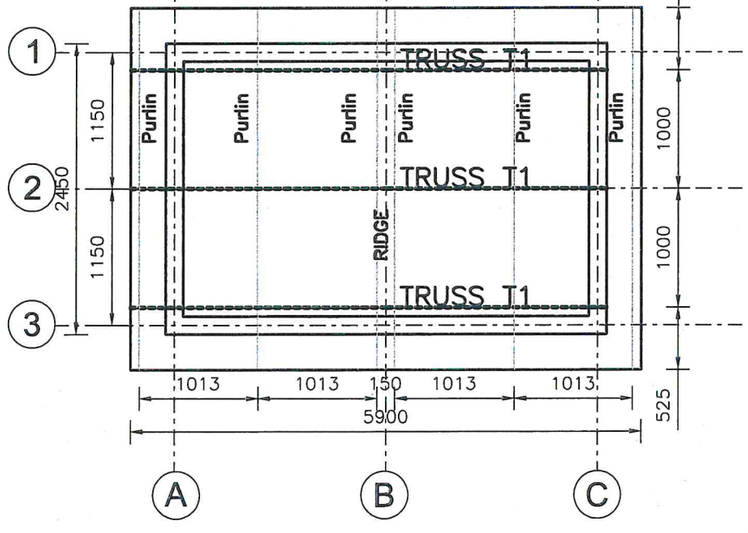

ROOF LAYOUT
SCALE 1:50

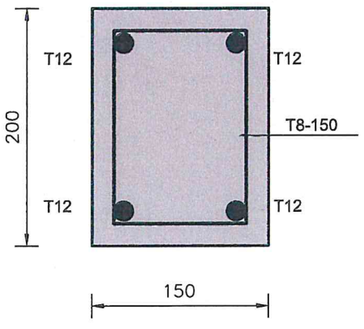

TYPICAL SECTION _Thru' Beam
SCALE 1:20

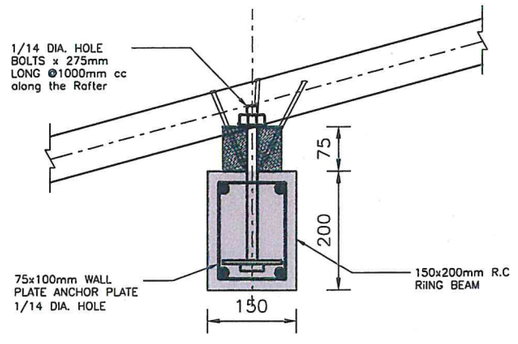

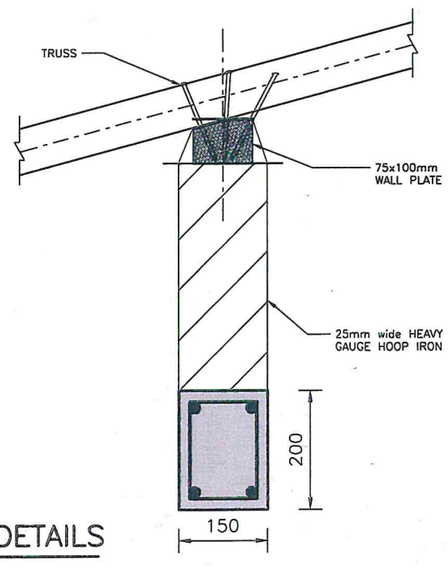

TYPICAL FIXING DETAILS
SCALE 1:10

CONSULTANT: MBW CONSULTING — Plot 107 Kira Road, Kamwokya, P.O.Box 8493, Kampala-Uganda. Tel: +256 (0)393 740600 / 0701 740600. Email: mbw@mbw.co.ug

FUNDER: USAID FROM THE AMERICAN PEOPLE

CLIENT: Uganda Wildlife Authority — @ugandawildlifeautority, PO Box 3530, Kampala, Uganda. Tel +256-41-355114, 355111, 355118

PROJECT NAME: USAID / Uganda Architect & Engineering Design and Construction Management Services

ACTIVITY NAME: Infrastructure for Biodiversity Conservation in Kidepo Valley NP

DRAWING DESCRIPTION: Ranger Posts _4 Stance Pit Latrine
ROOF LAYOUT AND DETAILS

DESIGNED BY: BB				
DRAWN BY: BK				
CHECKED BY: BB				
APPROVED BY: WF	REV_1	SEP 2022	DESCP_REVISED THE LAYOUT	
	REV. No.	DATE	DESCRIPTION OF REVISION	BY

ENGINEER'S SEAL

SCALE: AS NOTED | REF FILE: –
STATUS: Construction | DATE: 2022.09.23 | PAPER: A3
DRAWING NUMBER: 908-01-BWC-3502

COPYRIGHT RESERVED

Ranger Posts

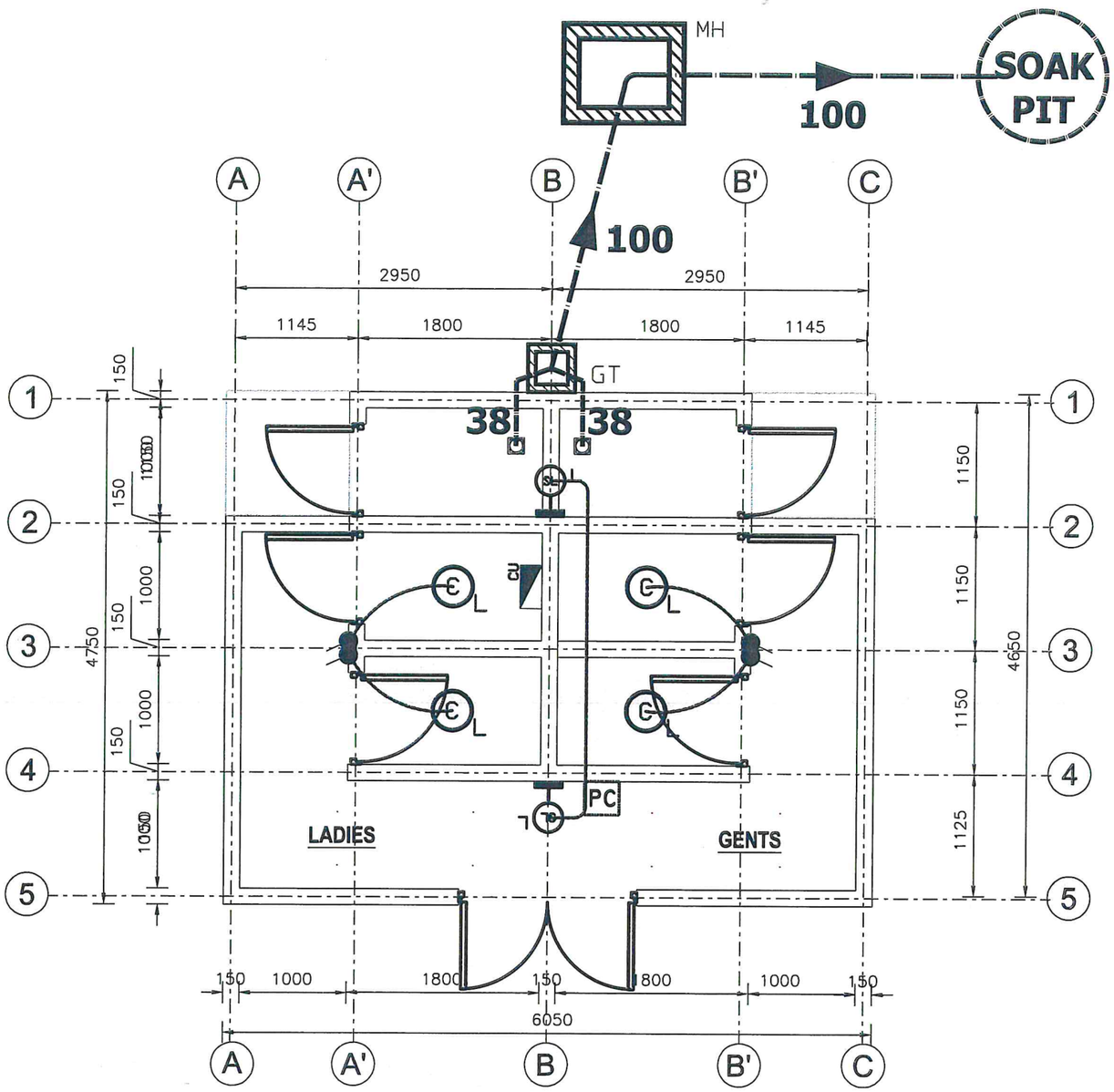

MECH. & ELECT. LAYOUT

SCALE 1:75

LEGEND

SYMBOL	DESCRIPTION
SL	Security bulkhead with cast aluminium body with glass lens and aluminium louver with 1x26W CFL lamp to IP44. as PIERLITE, AL 236 or equal approved
C	Pendant (Ceiling.Rose, flex, lamp holder, lamp) 8W CFL
W	13A two Gang switched Socket outlet on wall.
	1 Gang 2way switch.
	1 Gang 1way switch.
	2 Gang 1way switch.
CU	Consumer Unit
PC	Photo cell

LEGEND

MH	Inspection chamber
GT	Gully trap
FT	Floor trap
	Drainage pipe

ENG. OGWANG CHARLES
UGANDA ENGINEERS REGISTRATION BOARD
ELECTRICAL ENGINEER ERB NO: 873

CONSULTANT:
MBW CONSULTING
Plot 107 Kira Road, Kamwokya, P.O.Box 8493, Kampala-Uganda
Tel: +256 (0)393 760800 / 0/701 760800
Email: mbw@mbw.co.ug

FUNDER:
USAID FROM THE AMERICAN PEOPLE

CLIENT:
Uganda Wildlife Authority
Ugandawildlifeauthority
PO Box 3530, Kampala, Uganda
Tel +256-41-355114, 355111, 355118

PROJECT NAME:
USAID / Uganda Architect & Engineering Design and Construction Management Services

ACTIVITY NAME:
Infrastructure for Biodiversity Conservation in Kidepo Valley NP

DRAWING DESCRIPTION:
Ranger Posts _4 Stance Pit Latrine
MECHANICAL & ELECTRICAL LAYOUT

DESIGNED BY:	BB
DRAWN BY:	BK
CHECKED BY:	BB
APPROVED BY:	WF

REV. No.	DATE	DESCRIPTION OF REVISION	BY
REV_1	SEP 2022	DESCP_REVISED THE LAYOUT	

ENGINEER'S SEAL

SCALE: AS NOTED
REF FILE: -
STATUS: Construction
DATE: 2022.09.23
PAPER: A3
DRAWING NUMBER: 908-01-DWG-E501

COPYRIGHT RESERVED

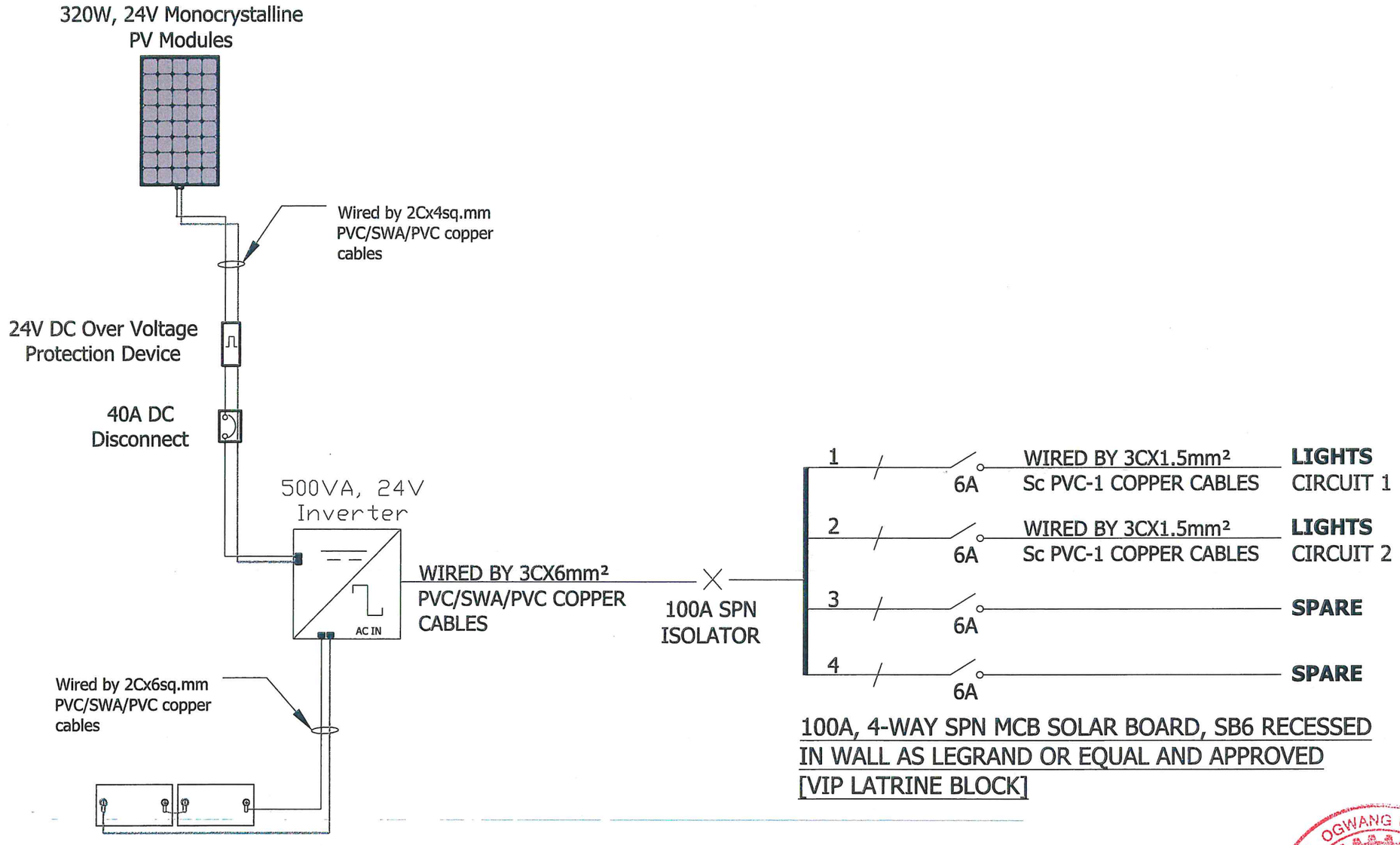

100A, 4-WAY SPN MCB SOLAR BOARD, SB6 RECESSED IN WALL AS LEGRAND OR EQUAL AND APPROVED [VIP LATRINE BLOCK]

SCHEMATIC DRAWING

SCALE: NTS

ENG. OGWANG CHARLES
UGANDA ENGINEERS REGISTRATION BOARD
ELECTRICAL ENGINEER ERB NO: 873

CONSULTANT: MBW CONSULTING — Plot 107 Kira Road, Kamwokya, P.O.Box 6493, Kampala-Uganda. Tel: +256 (0)393 740800 / 0701 740800. Email: mbw@mbw.co.ug	FUNDER: USAID FROM THE AMERICAN PEOPLE	CLIENT: Uganda Wildlife Authority — @ugandawildlifeauthority, PO Box 3530, Kampala, Uganda. Tel +256-41-339114, 355111, 355110	PROJECT NAME: USAID / Uganda Architect & Engineering Design and Construction Management Services ACTIVITY NAME: Infrastructure for Biodiversity Conservation in Kidepo Valley NP DRAWING DESCRIPTION: Ranger Posts _4 Stance Pit Latrine ELECTRICAL SCHEMATICS	DESIGNED BY: BB DRAWN BY: BK CHECKED BY: BB APPROVED BY: WF	REV_1	SEP 2022	DESCP_REVISED THE LAYOUT		ENGINEER'S SEAL	SCALE: AS NOTED; REF FILE: – STATUS: Construction; DATE: 2022.09.23; PAPER: A3 DRAWING NUMBER: 906-01-DWG-E502
					REV. No.	DATE	DESCRIPTION OF REVISION	BY		COPYRIGHT RESERVED