KITCHEN DRAWINGS

ARCH. SSEREMBA ROBERT
(MUK), MPPM (UMU), MUSA
UGANDA SOCIETY OF ARCHITECTS
REGISTRATION NO. 03

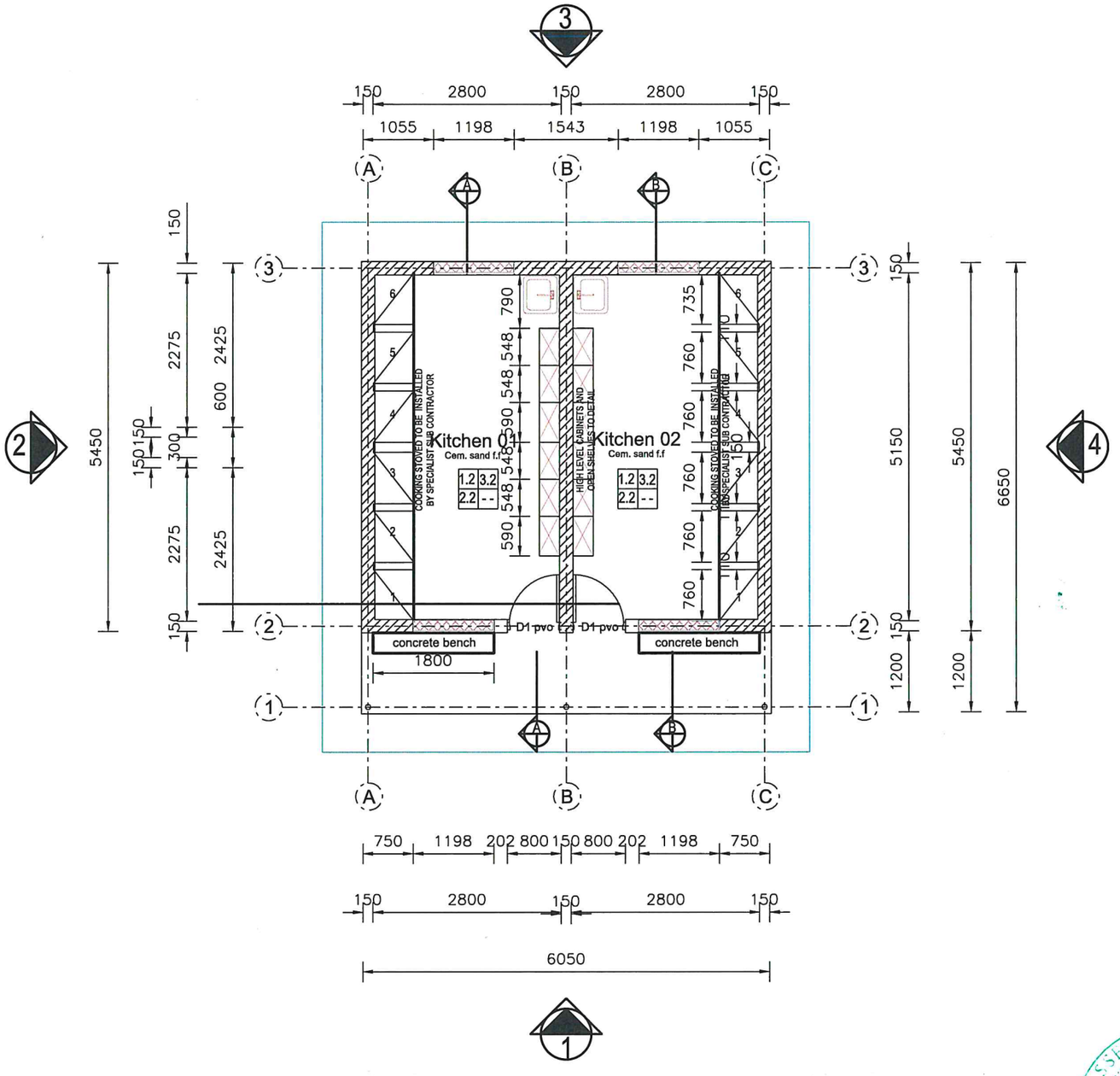

FLOOR LAYOUT
SCALE 1:75

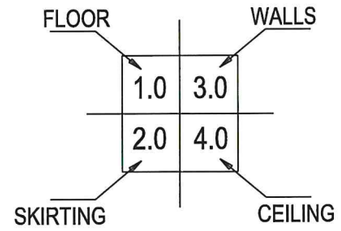

FINISHES SCHEDULE

1.0 FLOOR:
1.1 Polished Terrazzo finish
1.2 Insitu concrete troweled smooth with cement.
1.3 Cement and sand screed troweled smooth with pigment and hardener

2.0 SKIRTING:
2.1 100mm high Terrazzo skirting
2.2 100mm high Cement-sand skirting
2.3 100mm high hardwood timber skirting

3.0 WALL FINISH:
3.1 25 mm thick Smooth Plaster finished with one coat Plaster Primer and 3 coats Silk Vinyl approved Paint
3.2 Ceramic wall tiles up to 2100mm height on approved waterproof grout

4.0 CEILING:
4.1 Gypsum plaster board ceiling with vinyl finish
4.2 Sadomatt ceiling paint on 12mm thick plastered metal lathe ceiling

ARCH. SSEREMBA ROBERT
Arch.MUK, MPPM (UMU), MUSA
UGANDA SOCIETY OF ARCHITECTS
REGISTRATION NO. 193

CONSULTANT:	FUNDER:	CLIENT:	PROJECT NAME: USAID / Uganda Architect & Engineering Design and Construction Management Services	DESIGNED BY: BB					ENGINEER'S SEAL	SCALE: AS NOTED	REF FILE: –
MBW CONSULTING, Plot 107 Kira Road, Kamwokya, P.O.Box 8493, Kampala-Uganda, Tel: +256 (0)393 240800 / 0(701 740800, Email: mbw@mbw.co.ug	USAID FROM THE AMERICAN PEOPLE	UWA Conserving for Generations; Uganda Wildlife Authority, @ugandawildlifeautority, PO Box 3530, Kampala, Uganda, Tel:+256-41-3355114, 355111, 355118	ACTIVITY NAME: Infrastructure for Biodiversity Conservation in Kidepo Valley NP	DRAWN BY: BK						STATUS: Construction	DATE: 2022.09.23 / PAPER: A3
			DRAWING DESCRIPTION: Ranger Posts _Kitchen Block FLOOR LAYOUT	CHECKED BY: BB						DRAWING NUMBER: 906-01-DWG-A401	
				APPROVED BY: WF	REV. No.	DATE	DESCRIPTION OF REVISION	BY		COPYRIGHT RESERVED	

Ranger Posts

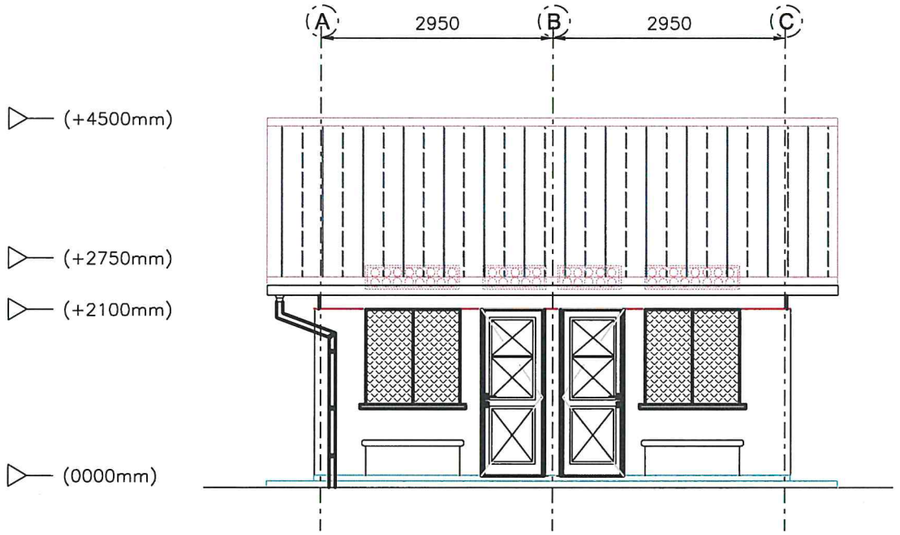

ELEVATION 01
SCALE 1:75

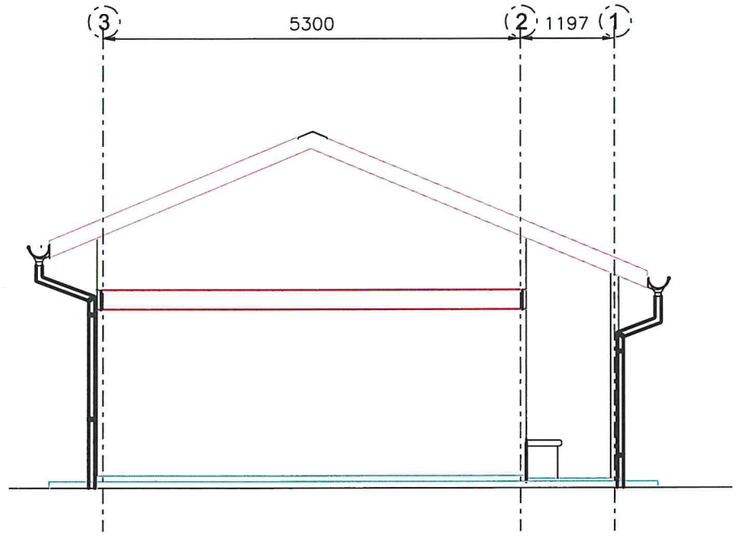

ELEVATION 02
SCALE 1:75

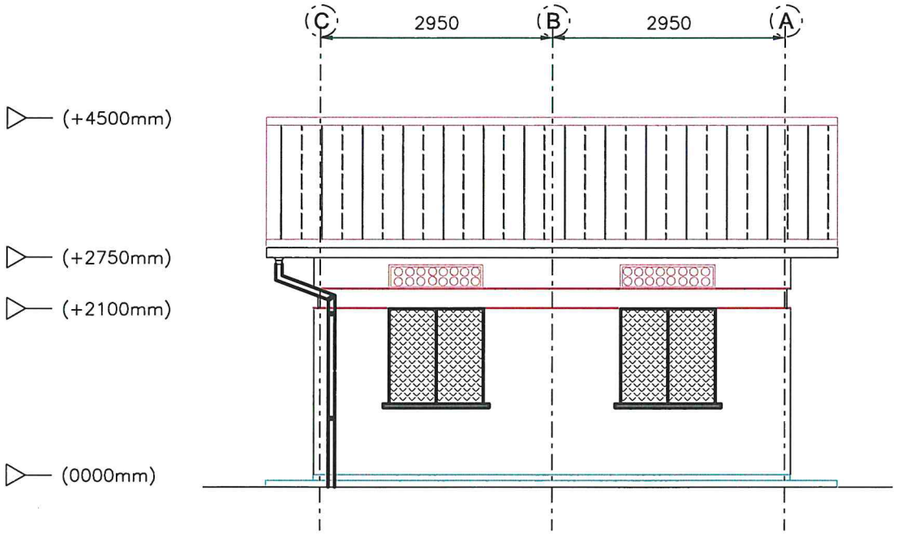

ELEVATION 03
SCALE 1:75

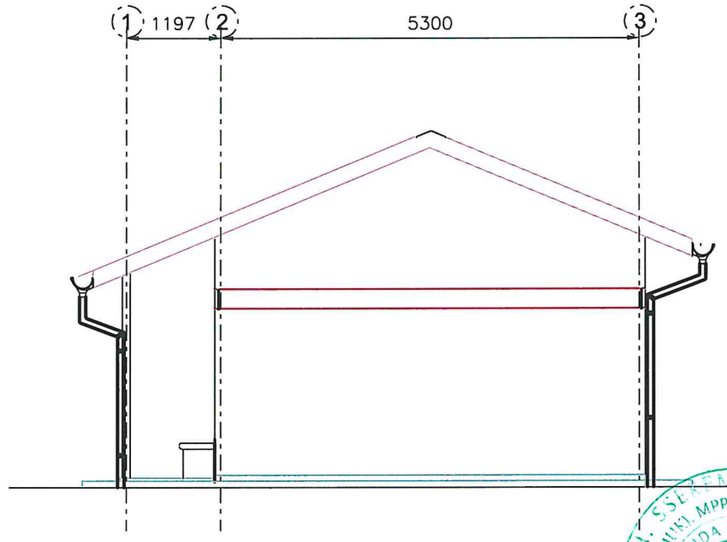

ELEVATION 04
SCALE 1:75

ARCH. SSEKEMBA ROBERT
Arch (MUK), MPPM (UMU), MUSA
UGANDA SOCIETY OF ARCHITECTS
ARB REGISTRATION NO. 1077

CONSULTANT:	FUNDER:	CLIENT:	PROJECT NAME: USAID / Uganda Architect & Engineering Design and Construction Management Services	DESIGNED BY: BB					ENGINEER'S SEAL	SCALE: AS NOTED	REF FILE: –
MBW CONSULTING Plot 107 Kira Road, Kamwokya, P.O.Box 8493, Kampala-Uganda Tel: +256 (0)393 740600 / 0(701 740600 Email: mbw@mbw.co.ug	USAID FROM THE AMERICAN PEOPLE	UWA Governing for Generations Uganda Wildlife Authority @ugandawildlifeautority PO Box 3530, Kampala, Uganda Tel +256-41-355114, 355111, 355118	ACTIVITY NAME: Infrastructure for Biodiversity Conservation in Kidepo Valley NP	DRAWN BY: BK						STATUS: Construction	DATE: 2022.09.23 / PAPER: A3
			DRAWING DESCRIPTION: Ranger Posts _Kitchen Block ELEVATIONS	CHECKED BY: BB						DRAWING NUMBER: 906–01–DWG–A402	
				APPROVED BY: WF	REV. No.	DATE	DESCRIPTION OF REVISION	BY		COPYRIGHT RESERVED	

Ranger Posts

	DOOR SCHEDULE	WINDOW SCHEDULE
Mark	D1	W 01
Elevation	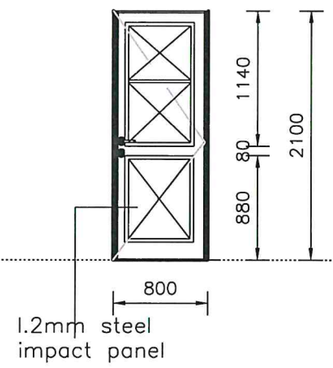	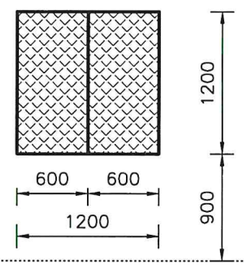
Plan	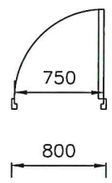	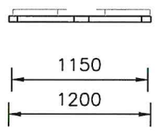
Remarks	MS. Steel door complete with locking accessories	Standard glazed louvered window or Big diamond Expanded metal lath. (Sill height 900mm)
Quantity	02	04
Location	Kitchen	Kitchen

DOOR AND WINDOW SCHEDULES
SCALE 1:50

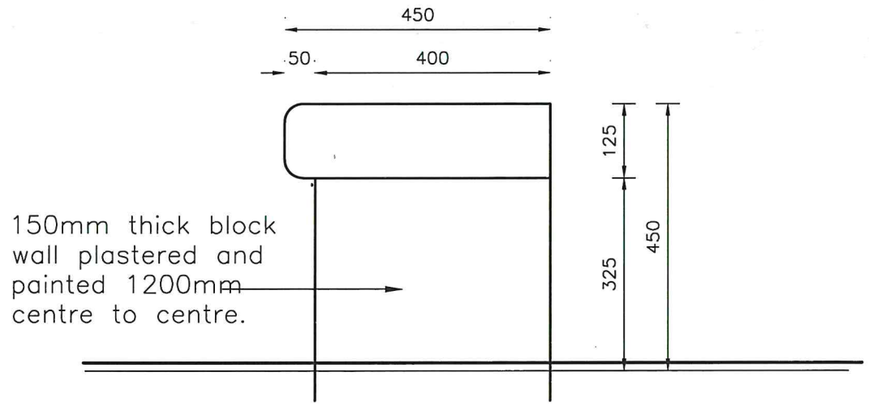

SIDE ELEVATION OF BENCH
SCALE 1:5

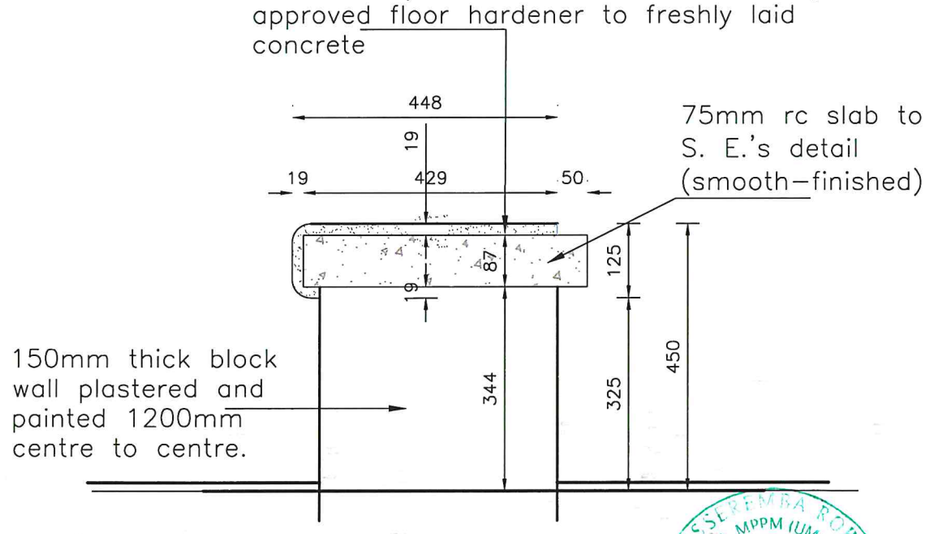

SECTION THRU' BENCH
SCALE 1:5

ARCH. SSEKEMBA ROBERT Arch(MUK), MPPM (UM), MUSA UGANDA SOCIETY OF ARCHITECTS REGISTRATION NO. 103

CONSULTANT:	FUNDER:	CLIENT:	PROJECT NAME: USAID / Uganda Architect & Engineering Design and Construction Management Services	DESIGNED BY: BB					ENGINEER'S SEAL	SCALE: AS NOTED	REF FILE: –
MBW CONSULTING Plot 107 Kira Road, Kamwokya, P.O.Box 6493, Kampala-Uganda Tel: +256 (0)393 740600 / 0)701 740600 Email: mbw@mbw.co.ug	USAID FROM THE AMERICAN PEOPLE	UWA Conserving for Generations Uganda Wildlife Authority @ugandawildlifeautority PO Box 3530, Kampala, Uganda Tel +256-41-355114, 355111, 355118	ACTIVITY NAME: Infrastructure for Biodiversity Conservation in Kidepo Valley NP	DRAWN BY: BK						STATUS: Construction	DATE: 2022.09.23 / PAPER: A3
			DRAWING DESCRIPTION: Ranger Posts _Kitchen Block OPENING SCHEDULES AND BENCH DETAILS	CHECKED BY: BB						DRAWING NUMBER: 906-01-DW0-A403	
				APPROVED BY: WF	REV. No.	DATE	DESCRIPTION OF REVISION	BY		COPYRIGHT RESERVED	

Ranger Posts

ROOF NOTES:

- 22.5 Roof Pitch of
- 26 gauge IT4 Roofing Sheets, on
- Steel trusses to SE detail

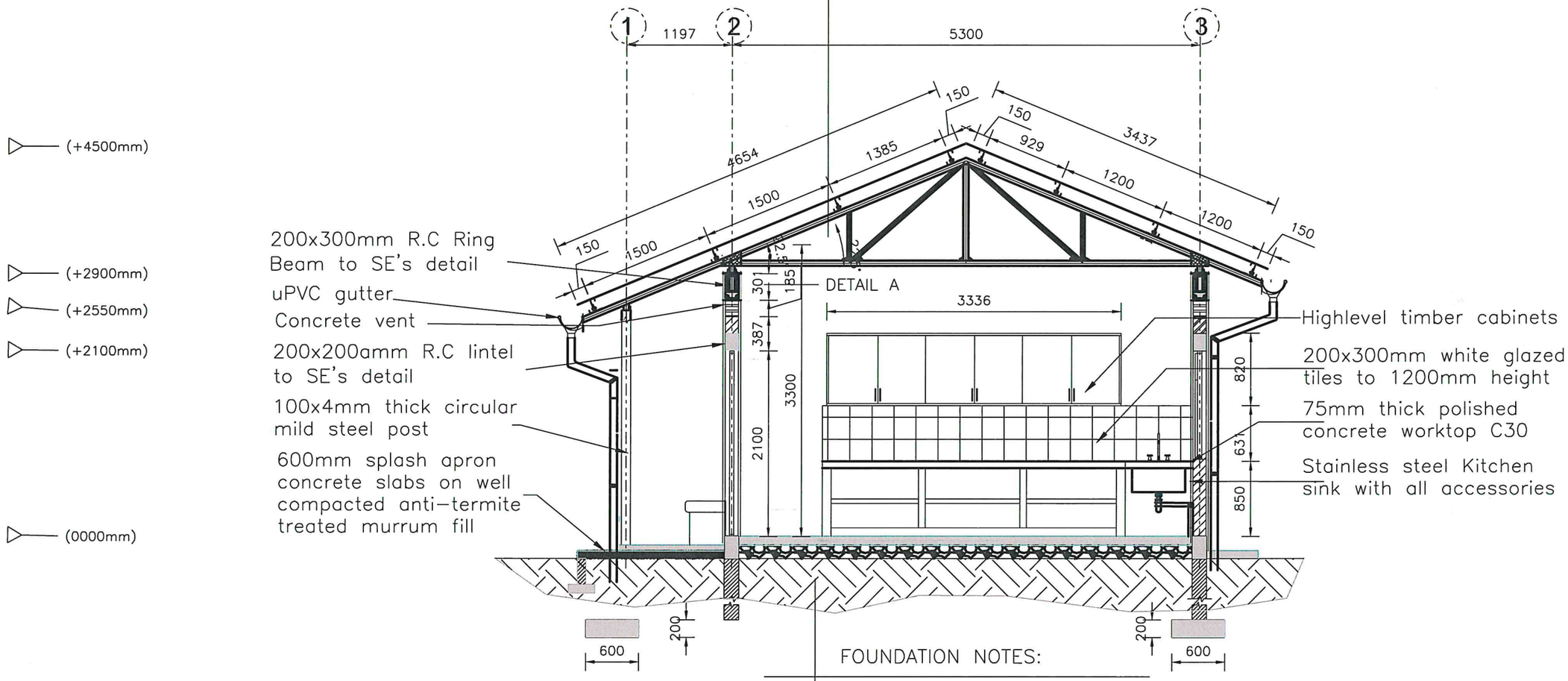

FOUNDATION NOTES:

- Cement Screed Floor finish on,
- 100mm thick concrete slab (1:3:6 mix) with BRC mesh A142 on,
- Gauge 1000mm visqueen or similar gauge dpm on,
- 50mm Clean Sand on,
- 200mm hard core on,
- Well compacted & anti-termite treated soil

SECTION B–B

SCALE 1:50

ARCH. SSEMBA ROBERT Arch (MUK), MPPM (UMU), MUSA UGANDA SOCIETY OF ARCHITECTS REGISTRATION NO. 1031

CONSULTANT:	FUNDER:	CLIENT:	PROJECT NAME: USAID / Uganda Architect & Engineering Design and Construction Management Services	DESIGNED BY: BB	REV. No.	DATE	DESCRIPTION OF REVISION	BY	ENGINEER'S SEAL	SCALE: AS NOTED	REF FILE: –
MBW CONSULTING, Plot 107 Kira Road, Kamwokya, P.O.Box 6433, Kampala-Uganda, Tel: +256 (0)393 240800 / 0)701 740800, Email: mbw@mbw.co.ug	USAID FROM THE AMERICAN PEOPLE	UWA Conserving for Generations; Uganda Wildlife Authority, @ugandawildlifeauthority, PO Box 3530, Kampala, Uganda, Tel:+256-41-355114, 355111, 355118	ACTIVITY NAME: Infrastructure for Biodiversity Conservation in Kidepo Valley NP	DRAWN BY: BK						STATUS: Construction	DATE: 2022.09.23 / PAPER: A3
			DRAWING DESCRIPTION: Ranger Posts _Kitchen Block SECTIONAL DETAILS	CHECKED BY: BB						DRAWING NUMBER: 906–01–DWG–A404	
				APPROVED BY: WF						COPYRIGHT RESERVED	

Ranger Posts

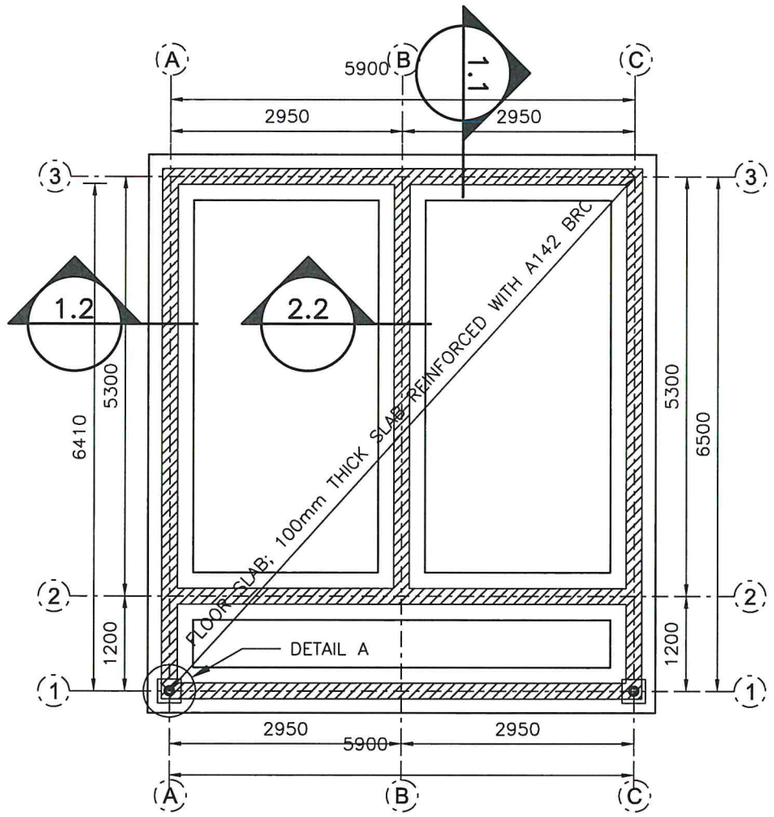

GROUND BEAM LAYOUT

SCALE 1:75

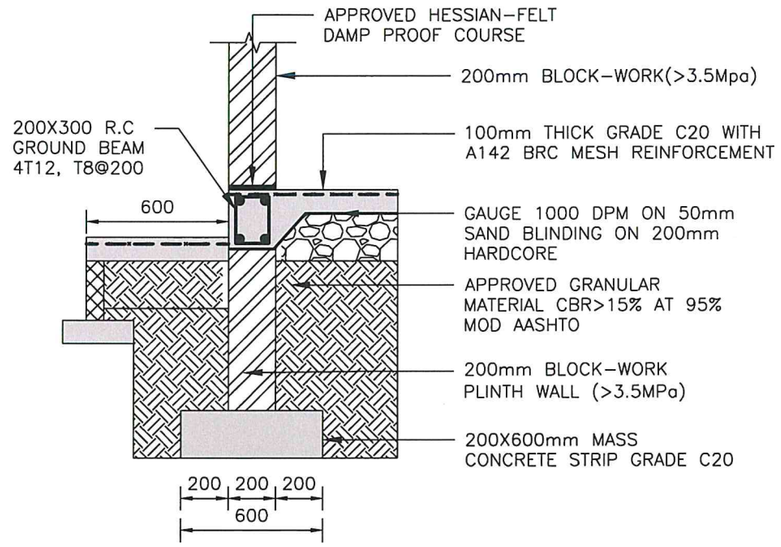

SECTION 1.1&1.2

SCALE 1:25

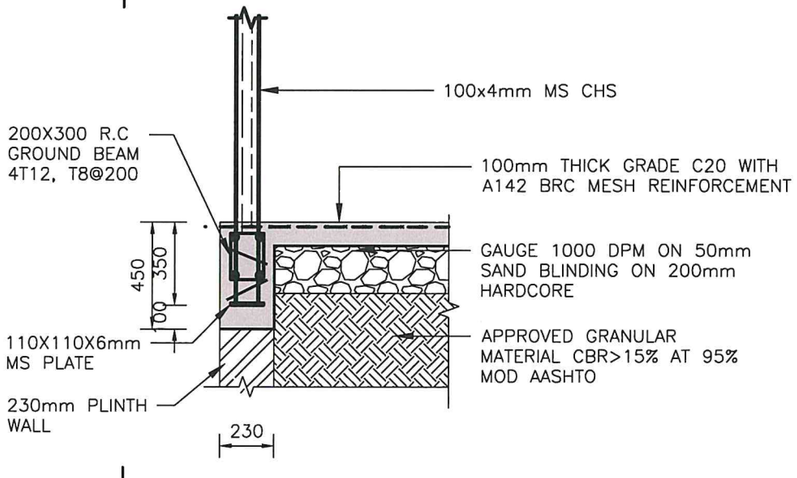

TYPICAL BASE DETAIL 'A'

SCALE 1:25

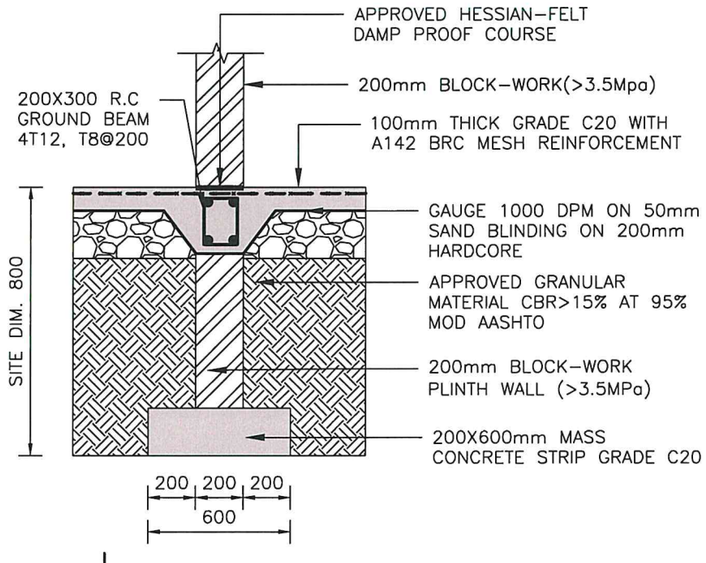

SECTION 2.2

SCALE 1:25

BUNNETT BAGOMPEKA
UGANDA ENGINEERS
REGISTRATION BOARD
ERB REGISTRATION NO. 1
9/12/2022

CONSULTANT:	FUNDER:	CLIENT:	PROJECT NAME: USAID / Uganda Architect & Engineering Design and Construction Management Services	DESIGNED BY: BB	REV. No.	DATE	DESCRIPTION OF REVISION	BY	ENGINEER'S SEAL	SCALE: AS NOTED	REF FILE: –
MBW CONSULTING. Plot 107 Kira Road, Kamwokya, P.O.Box 6493, Kampala-Uganda. Tel: +256 (0)393 740600 / 0(751 740600. Email: mbw@mbw.co.ug	USAID FROM THE AMERICAN PEOPLE	UWA Conserving for Generations. Uganda Wildlife Authority @ugandawildlifeauthority PO Box 3530, Kampala, Uganda Tel +256-41-355114, 355111, 355118	ACTIVITY NAME: Infrastructure for Biodiversity Conservation in Kidepo Valley NP	BK						STATUS: Construction	DATE: 2022.09.23 / PAPER: A3
			DRAWING DESCRIPTION: Ranger Posts _Kitchen Block FOUNDATION LAYOUT AND DETAILS	CHECKED BY: BB						DRAWING NUMBER: 908-01-DWG-S401	
				APPROVED BY: WF						COPYRIGHT RESERVED	

Ranger Posts

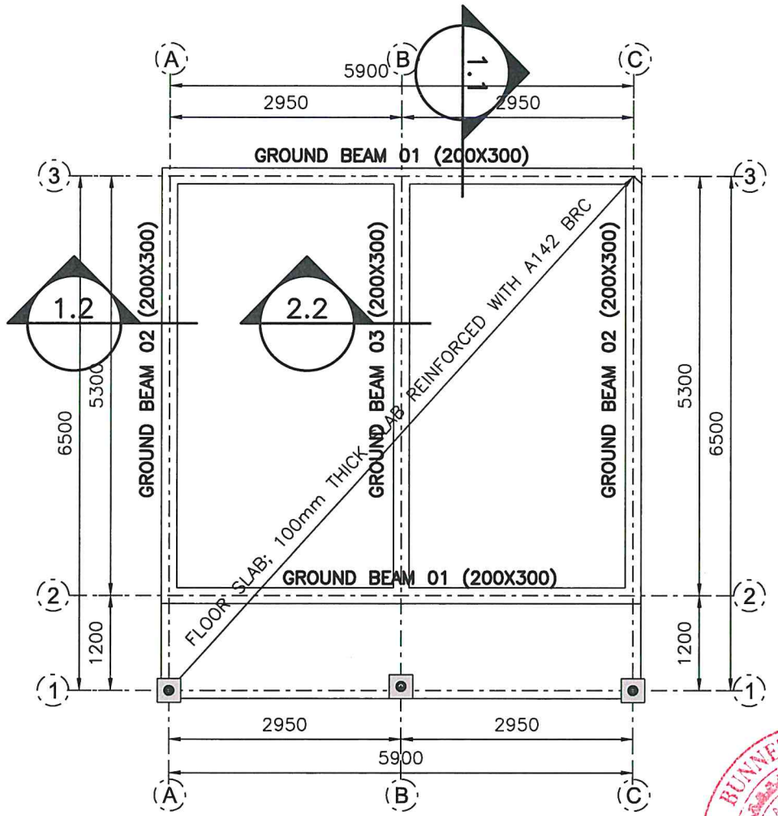

GROUND BEAM LAYOUT
SCALE 1:50

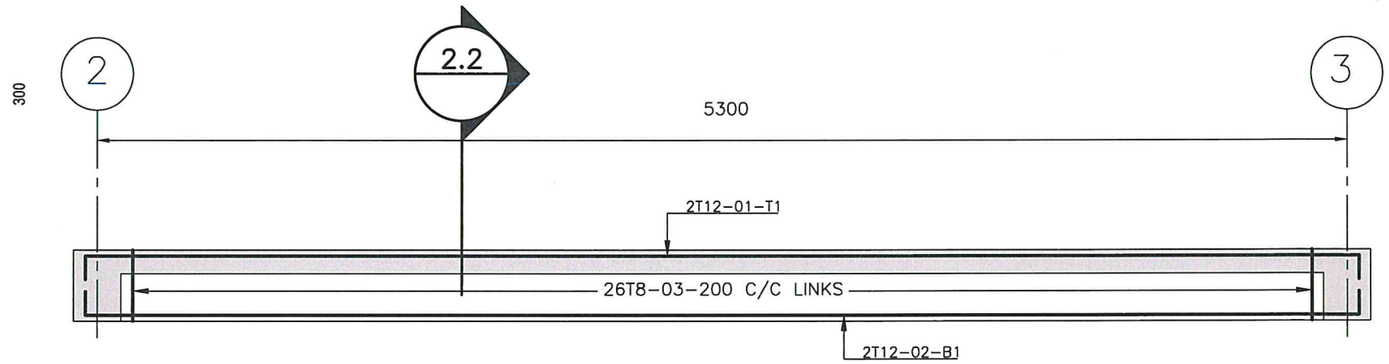

GROUND BEAM 02&03 (200X300) ELEVATION DETAILS-3No.
SCALE 1:50

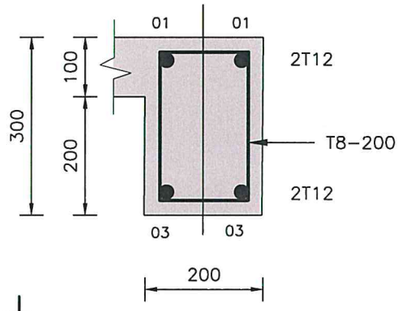

SECTION 1.1&1.2
SCALE 1:10

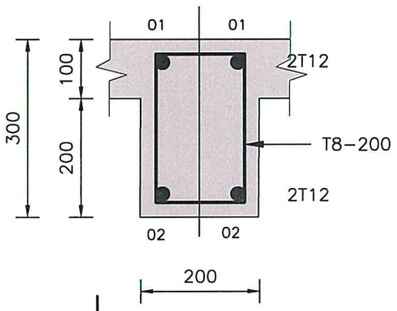

SECTION 2.2
SCALE 1:10

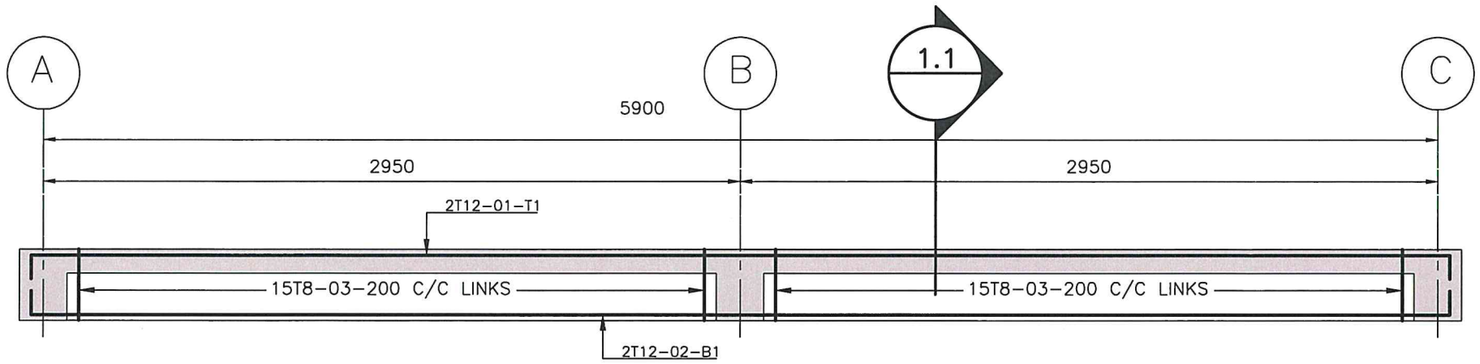

GROUND BEAM 01 (200X300) ELEVATION DETAILS-2No.
SCALE 1:50

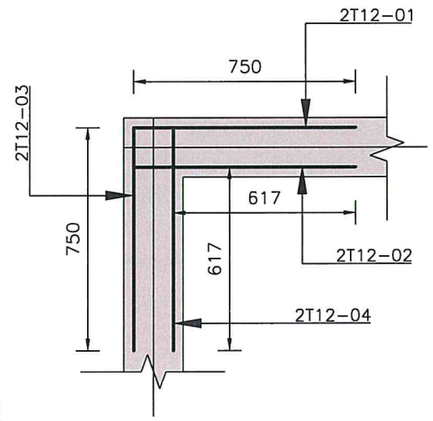

PLAN DETAIL FOR CORNER
SCALE 1:20

BUNNETT BAGOMPEKA
UGANDA ENGINEERS
ERB REGISTRATION
9/12/2022

CONSULTANT:	FUNDER:	CLIENT:	PROJECT NAME: USAID / Uganda Architect & Engineering Design and Construction Management Services	DESIGNED BY: BB	REV. No.	DATE	DESCRIPTION OF REVISION	BY	ENGINEER'S SEAL	SCALE: AS NOTED	REF FILE: –
MBW CONSULTING Plot 107 Kira Road, Kamwokya, P.O.Box 6493, Kampala-Uganda Tel: +256 (0)393 740800 / 0)701 740800 Email: mbw@mbw.co.ug	USAID FROM THE AMERICAN PEOPLE	Uganda Wildlife Authority @ugandawildlifeautority PO Box 3530, Kampala, Uganda Tel +256-41-355114, 355111, 355118	ACTIVITY NAME: Infrastructure for Biodiversity Conservation in Kidepo Valley NP	DRAWN BY: BK						STATUS: Construction	DATE: 2022.09.23 / PAPER: A3
			DRAWING DESCRIPTION: Ranger Posts _Kitchen Block GROUND BEAM LAYOUT AND DETAILS	CHECKED BY: BB						DRAWING NUMBER: 906-01-DWG-S402	
				APPROVED BY: WF						COPYRIGHT RESERVED	

Ranger Posts

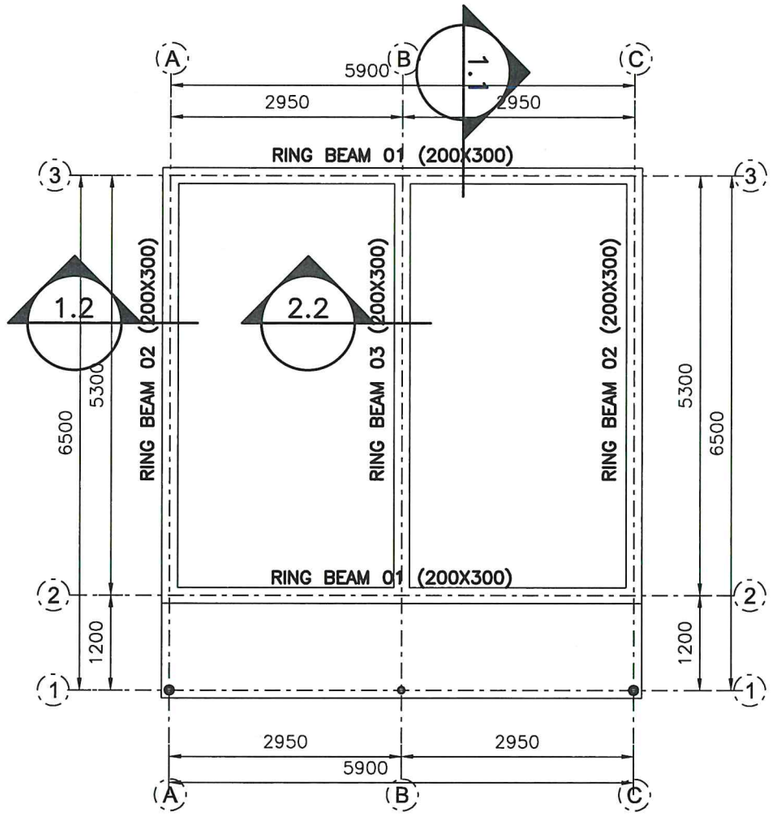

RING BEAM LAYOUT
SCALE 1:75

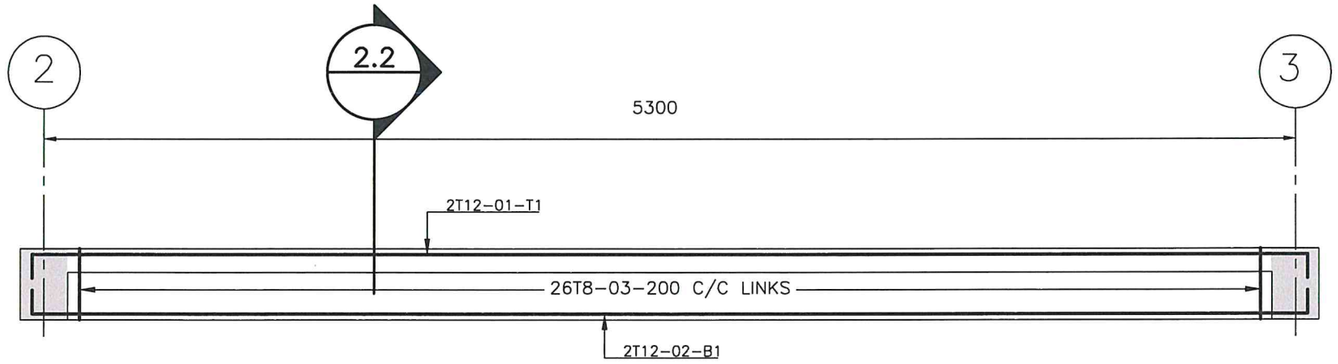

RING BEAM 02&03 (200X300) ELEVATION DETAILS–3No.
SCALE 1:25

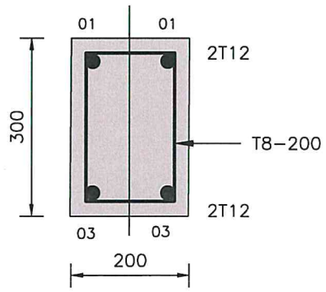

SECTION 1.1;1.2&2.2
SCALE 1:10

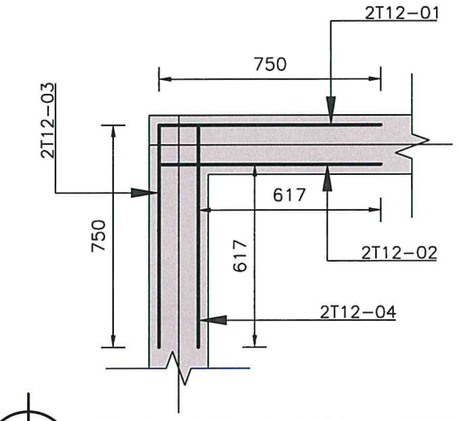

PLAN DETAIL FOR CORNER
SCALE 1:20

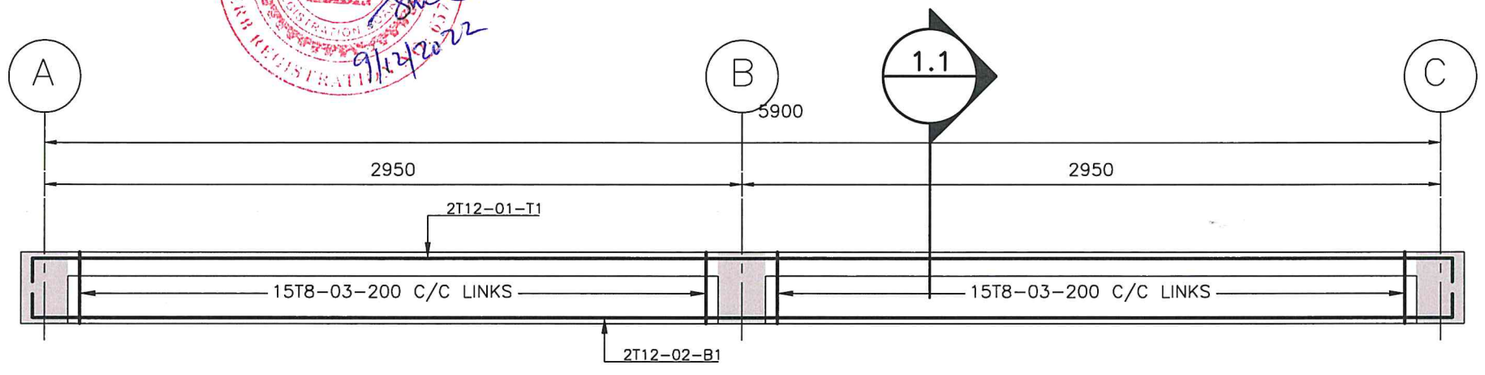

RING BEAM 01 (200X300) ELEVATION DETAILS–2No.
SCALE 1:25

BURNETT BAGOMPEKA
UGANDA ENGINEERS
ERB
REGISTRATION
ERB REGISTRATION
9/12/2022

CONSULTANT:	FUNDER:	CLIENT:	PROJECT NAME: USAID / Uganda Architect & Engineering Design and Construction Management Services	DESIGNED BY: BB					ENGINEER'S SEAL	SCALE: AS NOTED	REF FILE: –
MBW CONSULTING Plot 107 Kira Road, Kamwokya, P.O.Box 8493, Kampala-Uganda Tel: +256 (0)393 240600 / 0)701 740600 Email: mbw@mbw.co.ug	USAID FROM THE AMERICAN PEOPLE	UWA Conserving for Generations Uganda Wildlife Authority @ugandawildlifeauthority PO Box 3530, Kampala, Uganda Tel +256-41-355114, 355111, 355118	ACTIVITY NAME: Infrastructure for Biodiversity Conservation in Kidepo Valley NP	DRAWN BY: BK						STATUS: Construction	DATE: 2022.09.23 / PAPER: A3
			DRAWING DESCRIPTION: Ranger Posts _Kitchen Block RING BEAM LAYOUT AND DETAILS	CHECKED BY: BB						DRAWING NUMBER: 908–01–DWG–S403	
				APPROVED BY: WF	REV. No.	DATE	DESCRIPTION OF REVISION	BY		COPYRIGHT RESERVED	

Ranger Posts

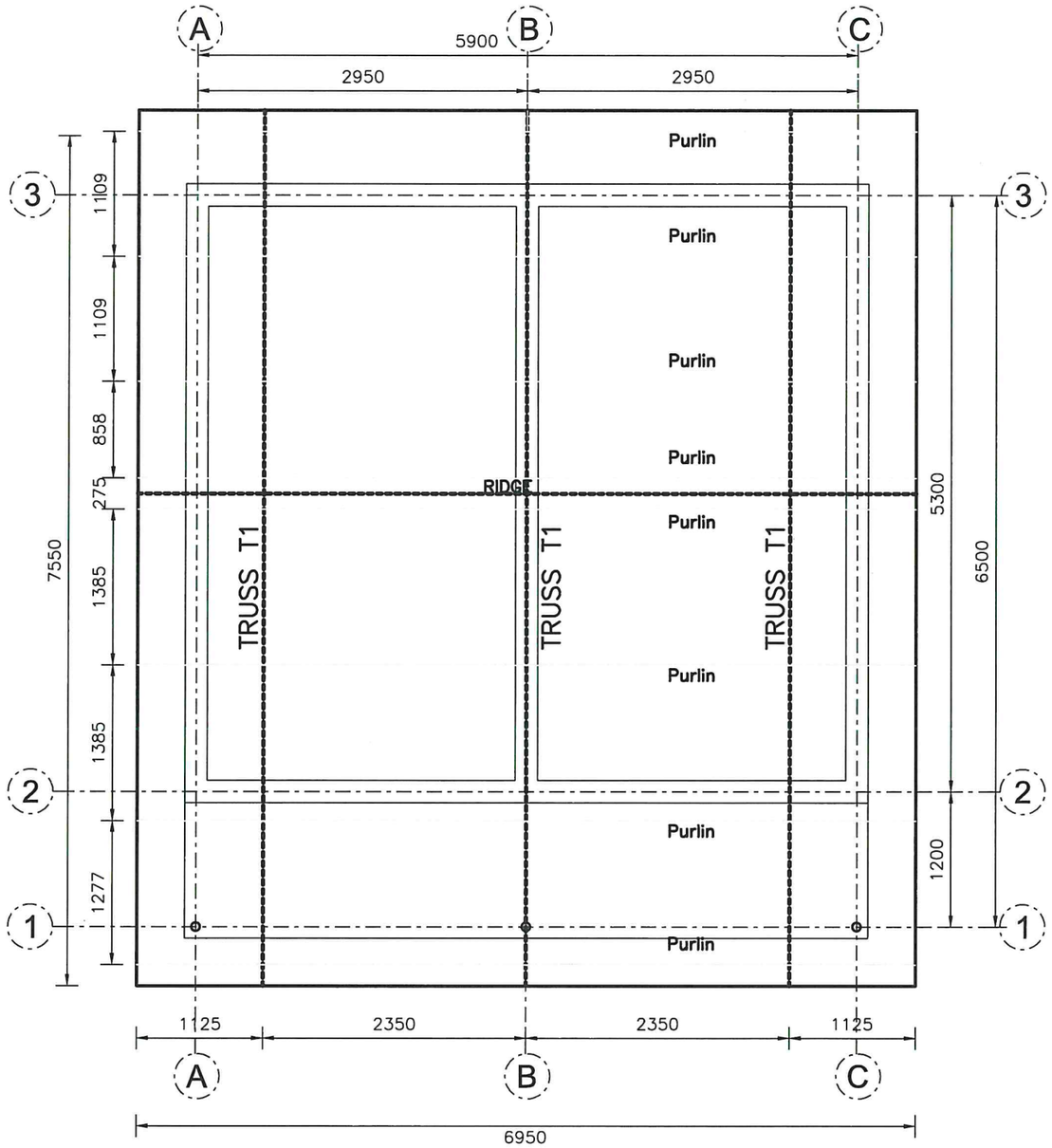

ROOF LAYOUT

SCALE 1:50

ROOF STRUCTURAL NOTES:

ROOF PITCH	– 22.5°	
TOP CHORD	– 50X50X3 SHS	5.44kg/m
BOTTOM CHORD	– 50X50X3 SHS	5.44kg/m
TIES/STRUTS	– 40X40X3 SHS	3.41kg/m
Z–PURLINS	– 150X50X2	3.54kg/m

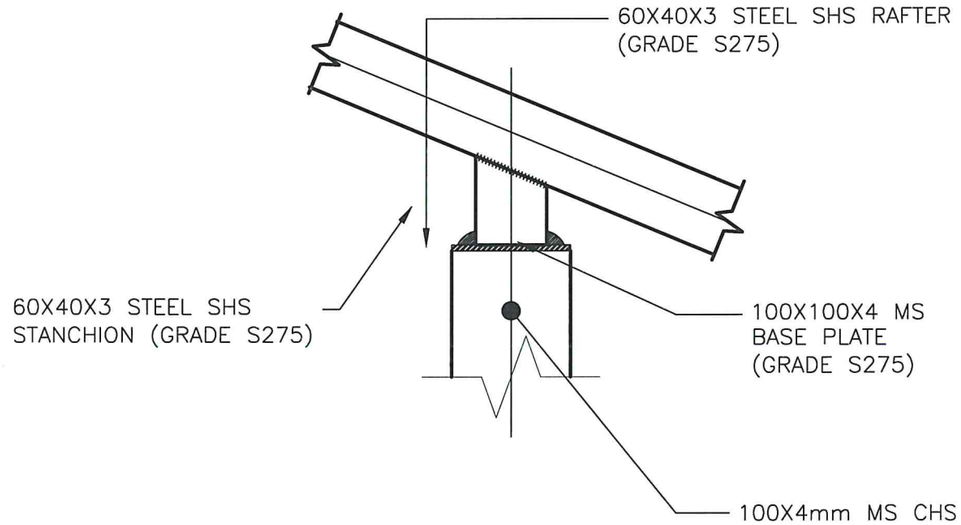

DETAIL 'B' (SEE DWG.S405)

SCALE 1:50

BUNNETT BAGOMPEKA
UGANDA ENGINEERS
REGISTRATION BOARD
ERB REGISTRATION
9/12/2022

CONSULTANT:	FUNDER:	CLIENT:	PROJECT NAME:	DESIGNED BY:					ENGINEER'S SEAL	SCALE: AS NOTED	REF FILE: –
MBW CONSULTING Plot 107 Kira Road, Kamwokya, P.O.Box 8493, Kampala-Uganda Tel: +256 (0)393 740800 / 0)701 740800 Email: mbw@mbw.co.ug	USAID FROM THE AMERICAN PEOPLE	UWA Conserving for Generations Uganda Wildlife Authority @ugandawildlifeautority PO Box 3530, Kampala, Uganda Tel +256-41-355114, 355111, 355118	USAID / Uganda Architect & Engineering Design and Construction Management Services ACTIVITY NAME: Infrastructure for Biodiversity Conservation in Kidepo Valley NP DRAWING DESCRIPTION: Ranger Posts _Kitchen Block ROOF TRUSS LAYOUT	BB DRAWN BY: BK CHECKED BY: BB APPROVED BY: WF	REV. No.	DATE	DESCRIPTION OF REVISION	BY		STATUS: Construction	DATE: 2022.09.23 / PAPER: A3
										DRAWING NUMBER: 906–01–DWG–S404	
										COPYRIGHT RESERVED	

Ranger Posts

ROOF STRUCTURAL NOTES:

ROOF PITCH	– 22.5°	
TOP CHORD	– 60X40X3 SHS	5.44kg/m
BOTTOM CHORD	– 60X40X3 SHS	5.44kg/m
KING POST	– 60X40X3 SHS	5.44kg/m
TIES/STRUTS	– 40X40X3 SHS	3.41kg/m
Z–PURLINS	– 150X50X2	3.54kg/m

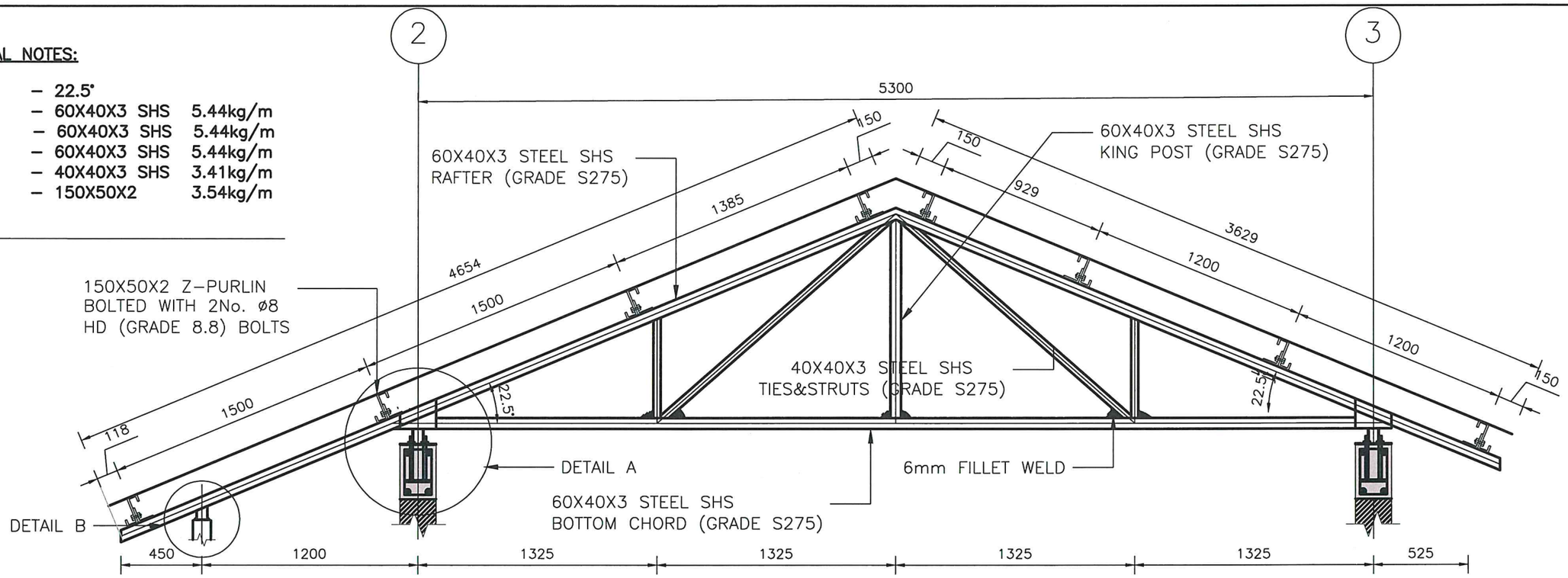

ROOF TRUSS T1–3No.

SCALE 1:25

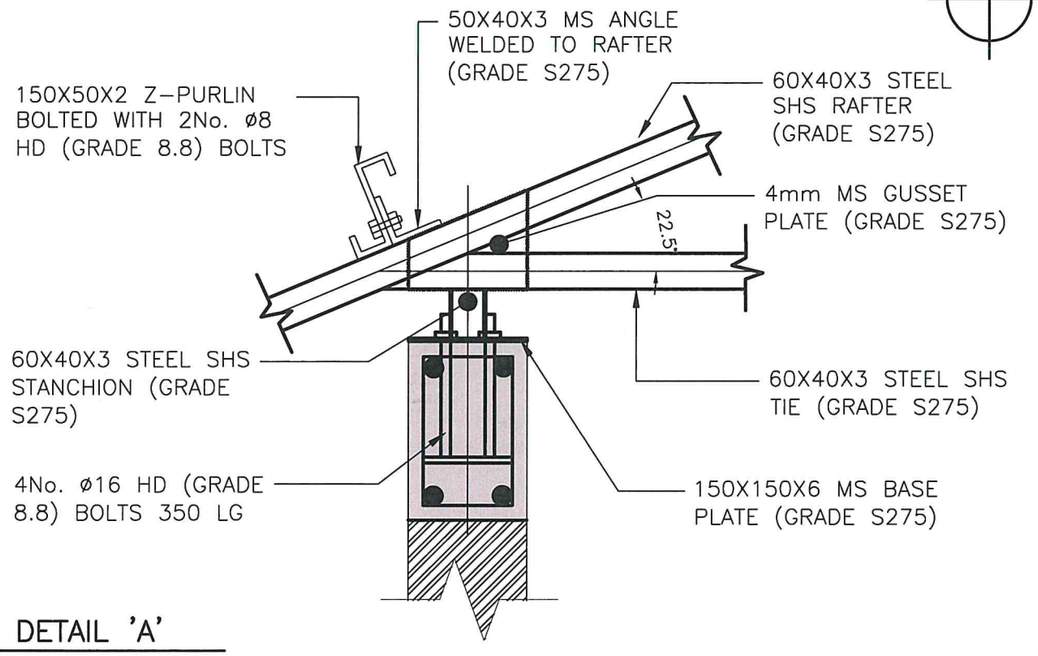

DETAIL 'A'

SCALE 1:10

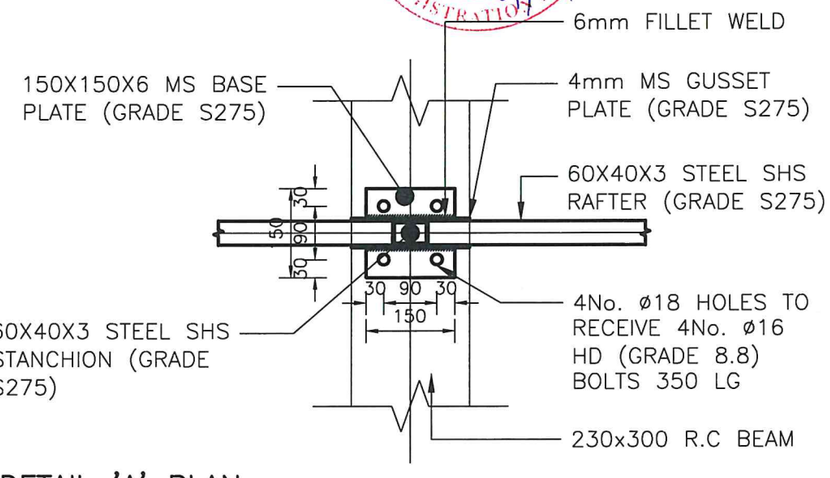

DETAIL 'A' PLAN

SCALE 1:10

BUNNETT BAGOMPEKA
ERB REGISTRATION
9/12/2022

CONSULTANT:	FUNDER:	CLIENT:	PROJECT NAME: USAID / Uganda Architect & Engineering Design and Construction Management Services	DESIGNED BY: BB	ENGINEER'S SEAL	SCALE: AS NOTED	REF FILE: –
MBW CONSULTING, Plot 107 Kira Road, Kamwokya, P.O.Box 8493, Kampala-Uganda, Tel: +256 (0)393 740600 / 0)701 740600, Email: mbw@mbw.co.ug	USAID FROM THE AMERICAN PEOPLE	Uganda Wildlife Authority, @ugandawildlifeautority, PO Box 3530, Kampala, Uganda, Tel +256-41-355114, 355111, 355118	ACTIVITY NAME: Infrastructure for Biodiversity Conservation in Kidepo Valley NP	DRAWN BY: BK		STATUS: Construction	DATE: 2022.09.23 / PAPER: A3
			DRAWING DESCRIPTION: Ranger Posts _Kitchen Block, ROOF TRUSS & FIXING DETAILS	CHECKED BY: BB		DRAWING NUMBER: 906–01–DW2–S405	
				APPROVED BY: WF	REV. No. / DATE / DESCRIPTION OF REVISION / BY	COPYRIGHT RESERVED	

Ranger Posts

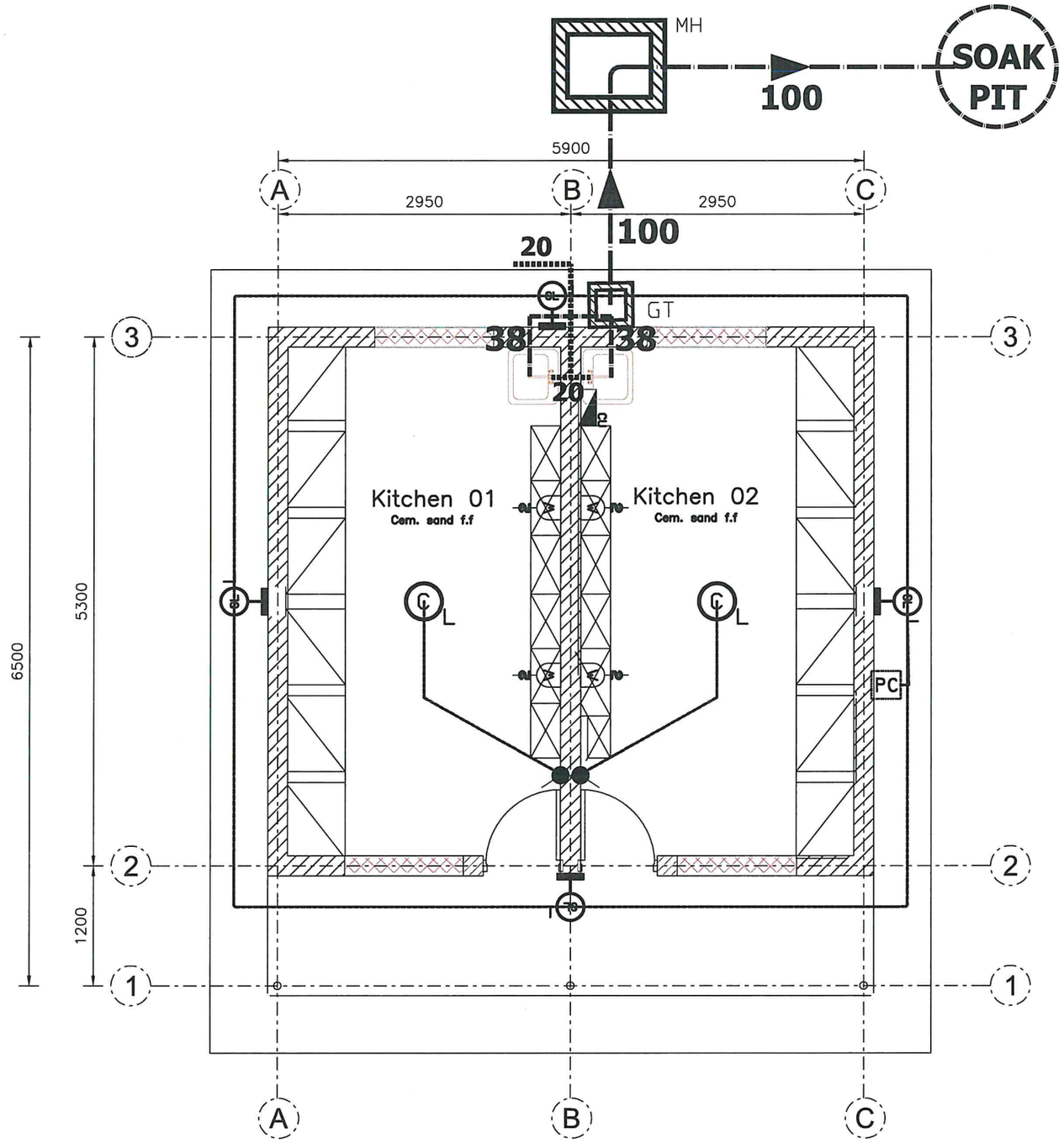

ELECTRICAL/MECHANICAL LAYOUT

SCALE 1:50

LEGEND

SYMBOL	DESCRIPTION
SL L	Security bulkhead with cast aluminium body with glass lens and aluminium louver with 1x26W CFL lamp to IP44. as PIERLITE, AL 236 or equal approved
C L	Pendant (Ceiling Rose, flex, lamp holder, lamp) 8W CFL
E W	13A two Gang switched Socket outlet on wall.
	1 Gang 2way switch.
	1 Gang 1way switch.
	2 Gang 1way switch.
CU	Consumer Unit
PC	Photo cell

LEGEND

MH	Inspection chamber
GT	Gully trap
FT	Floor trap
	Drainage pipe

ENG. OGWANG CHARLES
UGANDA ENGINEERS REGISTRATION BOARD
ELECTRICAL ENGINEER ERB NO: 873

CONSULTANT:
MBW CONSULTING
Plot 107 Kira Road, Kamwokya,
P.O.Box 8493, Kampala-Uganda
Tel: +256 (0)393 240600 /
0)701 240600
Email: mbw@mbw.co.ug

FUNDER:
USAID FROM THE AMERICAN PEOPLE

CLIENT:
Uganda Wildlife Authority
@ugandawildlifeautority
PO Box 3530, Kampala,
Uganda
Tel +256-41-355114, 355111,
355118

PROJECT NAME:
USAID / Uganda Architect & Engineering Design and Construction Management Services

ACTIVITY NAME:
Infrastructure for Biodiversity Conservation in Kidepo Valley NP

DRAWING DESCRIPTION:
Ranger Posts _Kitchen Block
ELECTRICAL & MECHANICAL LAYOUT

DESIGNED BY: BB
DRAWN BY: BK
CHECKED BY: BB
APPROVED BY: WF

REV. No.	DATE	DESCRIPTION OF REVISION	BY

ENGINEER'S SEAL

SCALE: AS NOTED
REF FILE: –
STATUS: Construction
DATE: 2022.09.23
PAPER: A3
DRAWING NUMBER: 906-01-DWG-E401

COPYRIGHT RESERVED

Ranger Posts

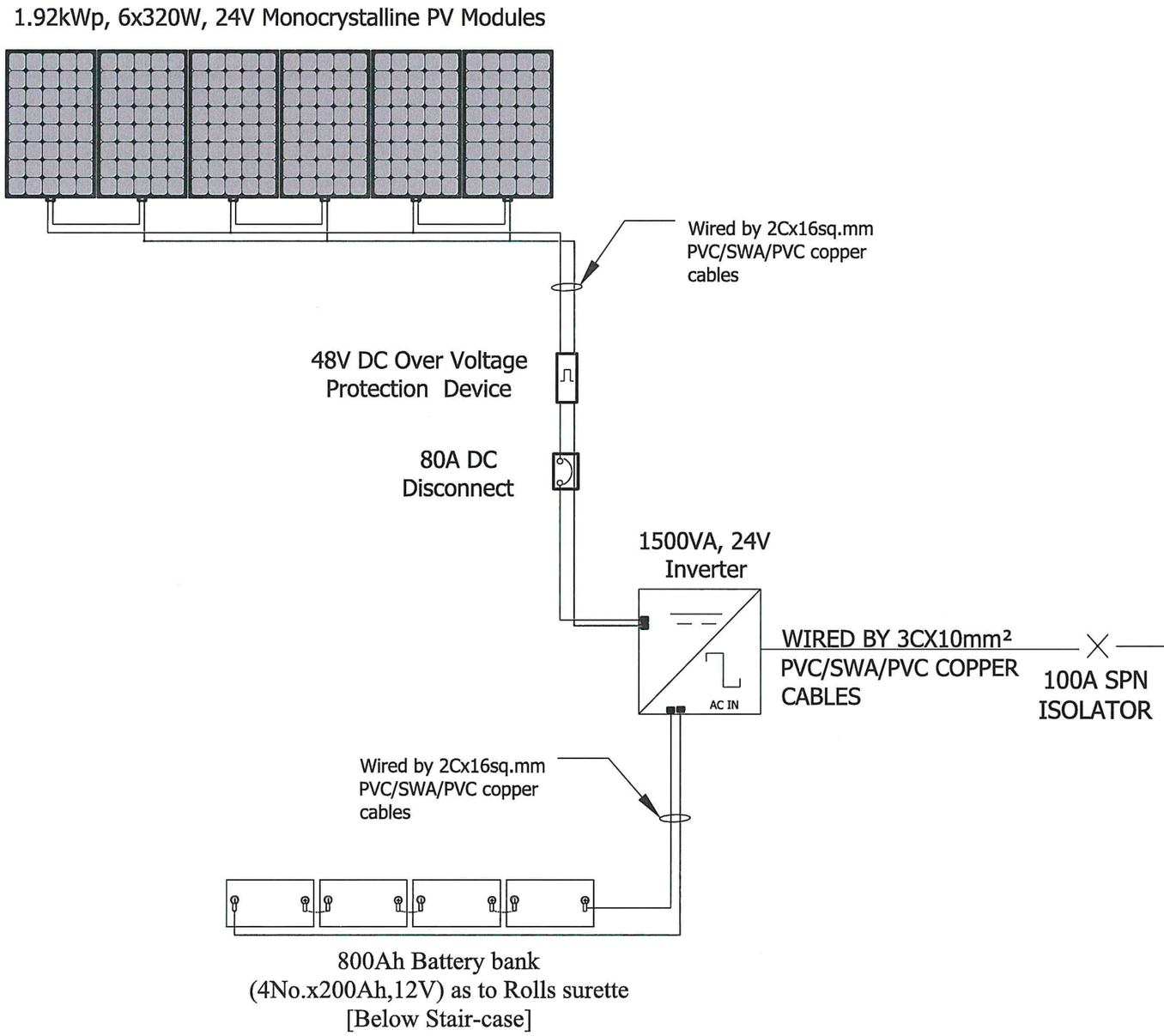

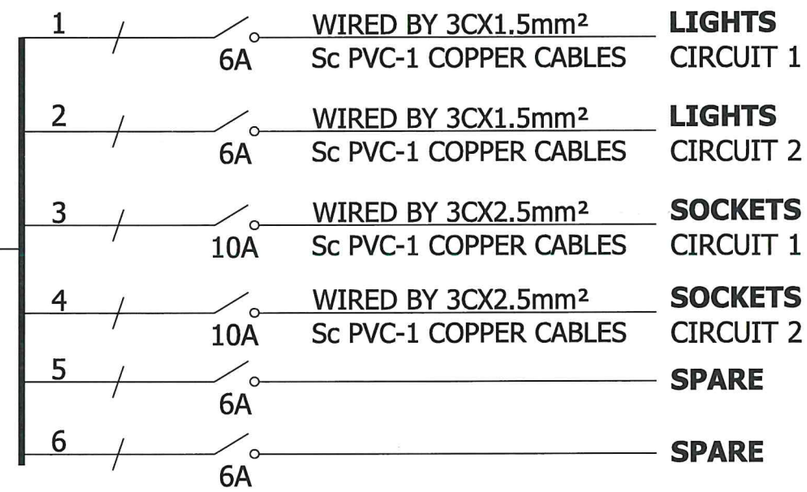

100A, 6-WAY SPN MCB SOLAR BOARD, SB4 RECESSED IN WALL AS LEGRAND OR EQUAL AND APPROVED [KITCHEN BLOCK]

ENG. OGWANG CHARLES
UGANDA ENGINEERS REGISTRATION BOARD
ELECTRICAL ENGINEER ERB NO: 873

SCHEMATIC DRAWING

SCALE: NTS

CONSULTANT:	FUNDER:	CLIENT:	PROJECT NAME: USAID / Uganda Architect & Engineering Design and Construction Management Services	DESIGNED BY: BB					ENGINEER'S SEAL	SCALE: AS NOTED	REF FILE: –
MBW CONSULTING, Plot 107 Kira Road, Kamwokya, P.O.Box 8493, Kampala-Uganda, Tel: +256 (0)393 740800 / 0)701 740800, Email: mbw@mbw.co.ug	USAID FROM THE AMERICAN PEOPLE	UWA Conserving for Generations, Uganda Wildlife Authority, @ugandawildlifeautority, PO Box 3530, Kampala, Uganda, Tel +256-41-355114, 355111, 355118	ACTIVITY NAME: Infrastructure for Biodiversity Conservation in Kidepo Valley NP	DRAWN BY: BK						STATUS: Construction	DATE: 2022.09.23 / PAPER: A3
			DRAWING DESCRIPTION: Ranger Posts _Kitchen Block ELECTRICAL-SCHEMATICS	CHECKED BY: BB						DRAWING NUMBER: 906–01–DWG–E401	
				APPROVED BY: WF	REV. No.	DATE	DESCRIPTION OF REVISION	BY		COPYRIGHT RESERVED	

Ranger Posts

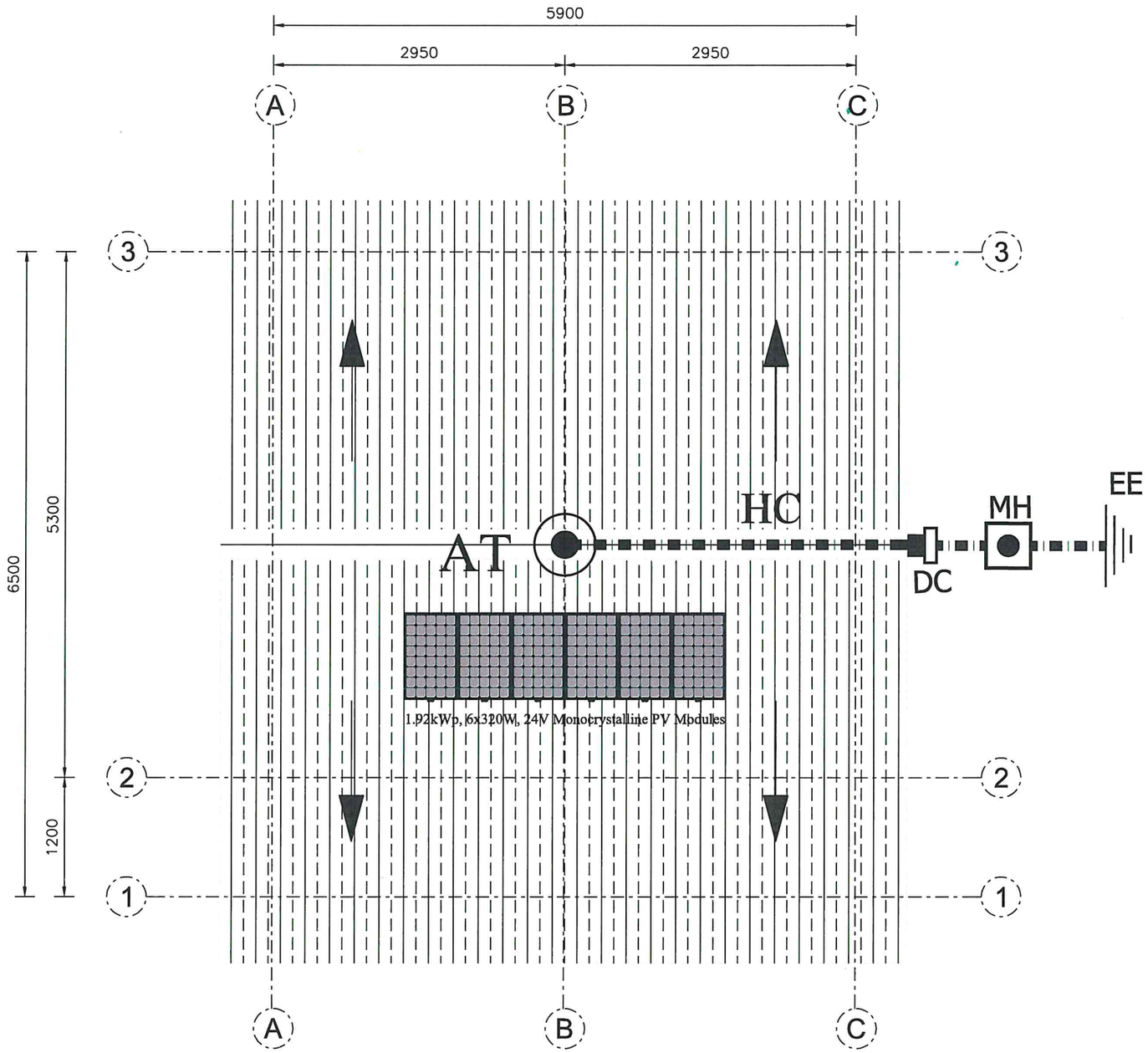

EARTHING LAYOUT
SCALE 1:50

LEGEND

AT	AIR TERMINAL
TB	TEST BLOCK
MH	INSPECTION MANHOLE
EE	EARTH ELECTRODE
HC	HORIZONTAL CONDUCTOR COPPER TAPE 3x25mm
DC	DOWN CONDUCTOR COPPER TAPE 3x25mm

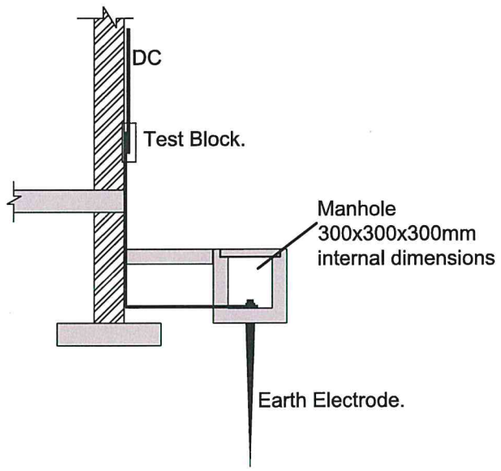

EARTHING DETAIL
SCALE: NTS

ENG. OGWANG CHARLES
UGANDA ENGINEERS REGISTRATION BOARD
ELECTRICAL ENGINEER ERB NO: 873

CONSULTANT:
MBW CONSULTING
Plot 107 Kira Road, Kamwokya, P.O.Box 6493, Kampala-Uganda
Tel: +256 (0)393 740800 / 0)701 740800
Email: mbw@mbw.co.ug

FUNDER:
USAID FROM THE AMERICAN PEOPLE

CLIENT:
UWA Conserving for Generations
Uganda Wildlife Authority
@ugandawildlifeauthority
PO Box 3530, Kampala, Uganda
Tel +256-41-355114, 355111, 355118

PROJECT NAME:
USAID / Uganda Architect & Engineering Design and Construction Management Services

ACTIVITY NAME:
Infrastructure for Biodiversity Conservation in Kidepo Valley NP

DRAWING DESCRIPTION:
Ranger Posts _Kitchen Block
EARTHING LAYOUT AND DETAILS

DESIGNED BY:	BB
DRAWN BY:	BK
CHECKED BY:	BB
APPROVED BY:	WF

REV. No.	DATE	DESCRIPTION OF REVISION	BY

ENGINEER'S SEAL

SCALE: AS NOTED		REF FILE: –
STATUS: Construction	DATE: 2022.09.23	PAPER: A3
DRAWING NUMBER: 906–01–DWG–E402		

COPYRIGHT RESERVED

Ranger Posts